Salisbury Pathways Committee

First Meeting

Date: Monday, August 11, 2014, at 5:15 p.m.

Location: Town Hall, Downstairs Meeting Room

Present: Katherine Kiefer, Frank Shinneman, Natalia Smirnova, Chris Williams

Minutes:

5:17 p.m. – call to order

1. Review Committee's statement of purpose. From the Minutes of the Board of Selectman meeting on 7/7/2014, and approved at the BOS Special Meeting on 7/31/2014, here is the relevant paragraph establishing this Committee:

"*K. Kiefer described a recent interest by several citizens to explore ways to improve pedestrian walkways in the village centers. She asked for a more formal designation of the committee and J. Dresser made a motion to appoint a Salisbury Pathways Committee, whose purpose is to "investigate walking access within and among the village centers". C. Rand seconded and approval of the motion was unanimous, including appointment of Natalia Smirnova, Frank Shinneman and Katherine Kiefer to the new committee."*

Motion to approve as stated – Chris Williams; Second – Frank Shinneman. The Statement of Purpose was approved unanimously.

2. Comments from First Selectman, Curtis Rand.

Curtis Rand outlined the following:

- The Salisbury Pathways Committee is a public entity, and thus should comply with all laws and regulations of the Freedom of Information Act and the Town of Salisbury. Agenda for the meeting should be available 24 hours in advance of any meeting; minutes should be posted on the town's web site no later than 7 days after a meeting; members of the committee should not e-mail any opinions to each other, only information; opinions should be shared at the open meeting and available to the public. Executive Session could be used to discuss any pending litigation. Committee should consult Freedom of Information Officer in Hartford with any questions.
- Town of Salisbury owns a bike path. It requires maintenance, which is done by the highway crew.
- It will be nice to connect two villages (Salisbury and Lakeville). Hotchkiss School connection to the village of Lakeville will help students to walk safely to the amenities.

Chris Williams added the following:

- Improvements are planned in Lakeville village. Route 44 is a Scenic Highway, Federal Primary Artery, Historic Road. So all improvements such as speed bumps have to be coordinated with the State. Drainage issues are important to address. Town of Salisbury has an Ordinance to Shovel sidewalks in front of everyone's property, but this is not enforced. The maintenance is done by the Grove employees in Salisbury village, and by Transfer Station employees in Lakeville village.

3. Citizen Comments

It seems that the Committee has its hands full, but I would like to say that westward expansion of the pathways from Lakeville village is very important. It is a well-travelled area and to increase the safety of pedestrians it will be nice to expand the pathway or sidewalk at least to Belgo Road.

4. Confirmation of the members of the Committee who have agreed to serve: Pat Hackett, Katherine Kiefer, Frank Shinneman, Natalia Smirnova, Chris Williams.
Motion to confirm Committee members – Chris Williams; Second – Frank Shinneman.
All members were confirmed unanimously.

5. Election of the officers of the Committee.
Officers were elected unanimously:
Chair of the Committee – Frank Shinneman;
Vice-Chair of the Committee – Katherine Kiefer;
Secretary of the Committee – Natalia Smirnova.

6. Setting of the terms.
Motion to confirm the terms – Chris Williams; Second – Frank Shinneman.

The following terms were proposed and approved:
Katherine Kiefer and Pat Hackett -- one year, Frank Shinneman and Natalia Smirnova 2 years, and Chris Williams 3 years -- three year terms and it is possible to re-up with maximum contiguous service of 9 years.

7. Set meeting dates for the next 12 months.

The Committee will meet every third Monday of the month at 5:30 p.m. in the downstairs room of the Salisbury Town Hall.

The following dates will be therefore the committee's meeting dates for 2014-2015:

September 15, 2014
October 20, 2014
November 17, 2014
December 15, 2014

January 19, 2015
February 16, 2015
March 16, 2015
April 20, 2015
May 18, 2015
June 15, 2015
July 20, 2015
August 17, 2015

8. Discussion of the maps we have up on the wall.
Maps were displayed that show the 1929 sidewalk existing in the Town of Salisbury. People looked at the maps and oriented themselves in the information they provide.

Discussion commenced about the importance of safe passage of pedestrians in between two villages, and in the "triangle" showed by Route 41-Cobble Road—Route 44.

The pass from Salisbury Central School to Fire House, which is an emergency evacuation route does not have a complete sidewalk. School children have to go on the road. During the emergency drill school has to secure with the State the closure of route 44 for that exercise. Committee was informed by Natalia Smirnova that the School Board supports any efforts leading to the improvement of students' safety.

Frank Shinneman explained that an organization called WalkCT registers all existing pathways in the State of Connecticut. They also have resources to draw from.

9. Preliminary agenda for the next meeting on September 15, 2014.

Committee will invite somebody from the Zoning Commission to explain what regulations we have to comply with and what issues we should be aware of when continuing our work. It will be good to identify any difficulties we might face in securing permits and in other areas. It will be nice to reach out the Salisbury Historic Archives to obtain photos of old sidewalks as they existed in 1930s-1940s. Chris Williams volunteered to reach out to the Archives. Through the month Committee members will refine the agenda items and agenda will be posted on Friday before the meeting. Natalia Smirnova suggested that if agenda is finalized a week before a meeting, we can send it to Lakeville Journal by Monday preceding the meeting by 10 a.m. to be printed in the newspaper.

Meeting adjourned at 6:12 p.m.

Minutes respectfully submitted by Natalia V. Smirnova, Secretary.

Salisbury Pathways Committee

Second Meeting

Date and Time: Monday, September 15, 2014, at 5:30 p.m.

Location: Salisbury Town Hall, Downstairs Meeting Room, first floor

Present: Katherine Kiefer, Natalia Smirnova, Chris Williams, Pat Hackett

Minutes:

5:30 p.m. – call to order.

1. Approval of Minutes of August 11, 2014 meeting.

Minutes of August 11, 2014 meeting were available online from August 18, and were available in print form during the meeting.

Motion to approve as written – Chris Williams; second – Katherine Kiefer.
Minutes were approved unanimously.

2. Pathway regulations and issues from Ms. Cathy Shyer, alternate member of the Salisbury Planning and Zoning Commission.

Cathy Shyer discussed the adopted 2012 Plan of Conservation and Development of the Town of Salisbury (POCD). She pointed out that several strategies discussed in the POCD will encompass this Committee's work, for example "provide for pedestrians and bicycles" (p.40) and "promote pedestrian improvements in the village centers of Salisbury, Lakeville and Lime Rock, which is status 1 priority for the Town and PZC (p.58). These improvements are considered as an opportunity to revitalize the villages and connect them by virtue of pedestrian access.

Cathy Shyer also stated that PZC was discussing the possibility of a pedestrian bridge over Rt. 41 near Black Rabbit, and the possibility of connecting The Hotchkiss School to the village of Lakeville. This will be fantastic to have pedestrian pathway to accommodate the year-round population of the school. Currently Hotchkiss runs a lot of summer programs in addition to regular school-year programs, so year-round population would benefit from the sidewalk.

Pat Hackett brought in and distributed page 28 of the POCD which identifies the Village Principles as vibrancy, internal connectivity, exterior connectivity, appropriate design, and investigation/action. In the Internal Connectivity section it states that "Internal connections are pathways for pedestrians, bicycles, and vehicles are important to the overall function and appearance of a village. To the extent possible, streets and adequate parking areas should interconnect to facilitate circulation and parking efficiency. Future pedestrian connections could include:

- Sidewalks in all areas;

- Secondary walkways within sites, and
- In Salisbury village, a pedestrian promenade linking Main Street with the Salisbury Winter Sports Association (SWSA) field."

In the Exterior Connectivity section the plan states that "While state highways provide the most visible means of access to the village centers, other means of access should also be p[provided and enhanced. For example, the pedestrian/bike path connecting the villages of Salisbury and Lakeville could be extended to surrounding areas (such as Town grove)."

It looks like PZC is a good partner for Pathways Committee to connect to and work together to forward several pathways projects.

Comment from a citizen: pathways around the town will have a visual impact and will increase the sub-urban feel of the place. So we have to be careful when planning these extensions.

Action plan: Pathways Committee should obtain the 2012 POCD and identify strategies/projects that coincide with and benefit Pathways Committee's mission. Pathways Committee members should make sure to attend PZC planning meetings and prioritize our projects in conjunction with theirs. We can benefit from cooperation with PZC.

3. Presentation of archive photos of pathways.

Chris Williams presented pictures of the sidewalks along Salisbury, Lakeville and Lime Rock. He pointed out that pathways and sidewalks are around our town for a long long time.

In 1850 – planting of elms and sidewalks begins.

In 1876 the Village Improvement Society was formed. Projects included planting trees (elms) along the streets, maintaining the sidewalks, lighting the streets, and the general betterment of the village. ("Salisbury: From Primitive Frontier to Flourishing Town", by Norm Sills, Salisbury, Connecticut Town Historian, p.35) – *Courtesy of Salisbury Historical Society.*

1895 – Village Park Association is founded.

1908 – New stone sidewalks laid in Lakeville... 15 mph speed limit signs posted in all villages of Salisbury... ("Highlights in the History of Salisbury, Connecticut, 1700-2000", p. 13) -- *Courtesy of Salisbury Historical Society.*

Initially sidewalks were helpful to separate pedestrians from streets, which were muddy and dirty with horse manure. When streets were paved, people started walking on them. Now as traffic increased, people want to be separate from traffic once again and to be safe. So sidewalks are highly utilized. Particular emphasis currently is on safety as cars and trucks are speeding on highways 44 and 41.

Pictures of sidewalks which existed in town, that were shown and discussed during the meeting, are attached.

Excerpts of the POCD that were discussed (p. 28 and p.58) are attached.

4. **Identification of top 2-3 pathway connections which would provide access to residents.**

Meeting participants prioritized the pathways sections as per comments from the citizens:

1. "***Connector***" -- connect existing sidewalks of the villages of Salisbury and Lakeville;
2. "***Triangle with Horns***" – triangle that is comprised by Rt. 41 North, Cobble Road, and Rt. 44 South with "horns extended to Appalachian Trail parking lot on Rt. 41 and Lion Head's community on Rt. 44;
3. The Hotchkiss School;
4. Belgo Road;
5. Around the Lake;
6. Lime Rock.

Committee decided to have a Global Approach whereas the plan will be developed to make all these pathways possible. However, the implementation stages will be separate for each section as per funds availability and other circumstances.

5. **Identify the key requirements to establish those pathways (e.g. right of way, bridges, distances, costs, permitting, etc.)**

Chris Williams brought in maps which identify the state's right-of-way in town. He explained that center lane of the right-of-way never changes, even though the highways itself may shift through time and also be not necessarily in the middle of the right-of-way zone. Currently sidewalks are required to be 5 feet wide to comply with wheel-chair accessibility. Also 3 feed wide grass zone should separate pedestrians from the traffic. So we are looking at 8 feet from the end of the asphalt of the highway.

6. **Preliminary agenda for the next meeting on October 20, 2014.**
   a. Bring the POCD brochure and discuss priorities of this committee that coincide with PZC priorities.
   b. Discuss what to present to Planning and Zoning Commission at their planning meeting.

Meeting adjourned at 6:45 p.m.

Minutes respectfully submitted by Natalia V. Smirnova, Secretary, on September 22, 2014.

Date: 9/8/14, 11:09 AM
To: "pwilliams@salisburyct.us" <pwilliams@salisburyct.us>

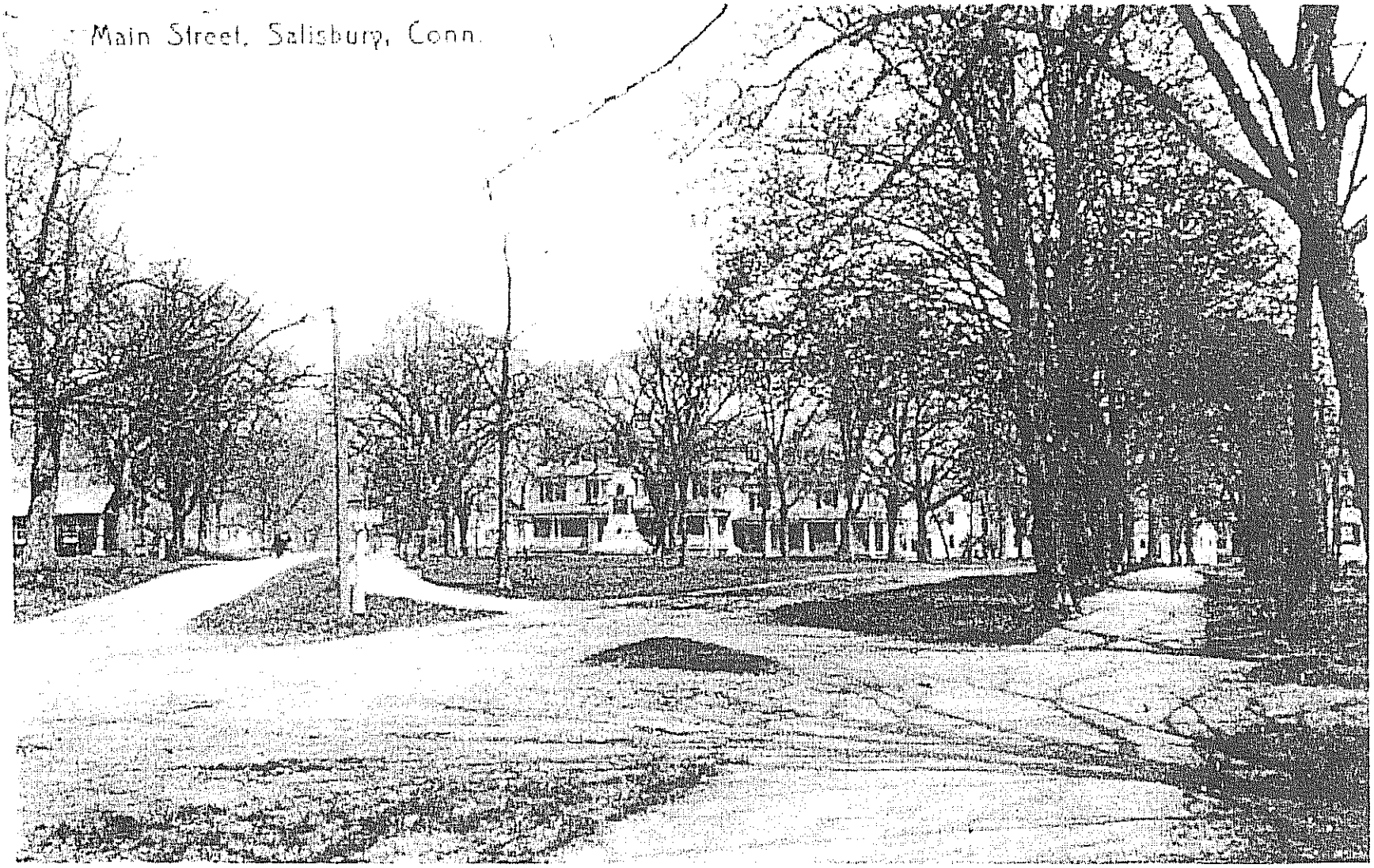

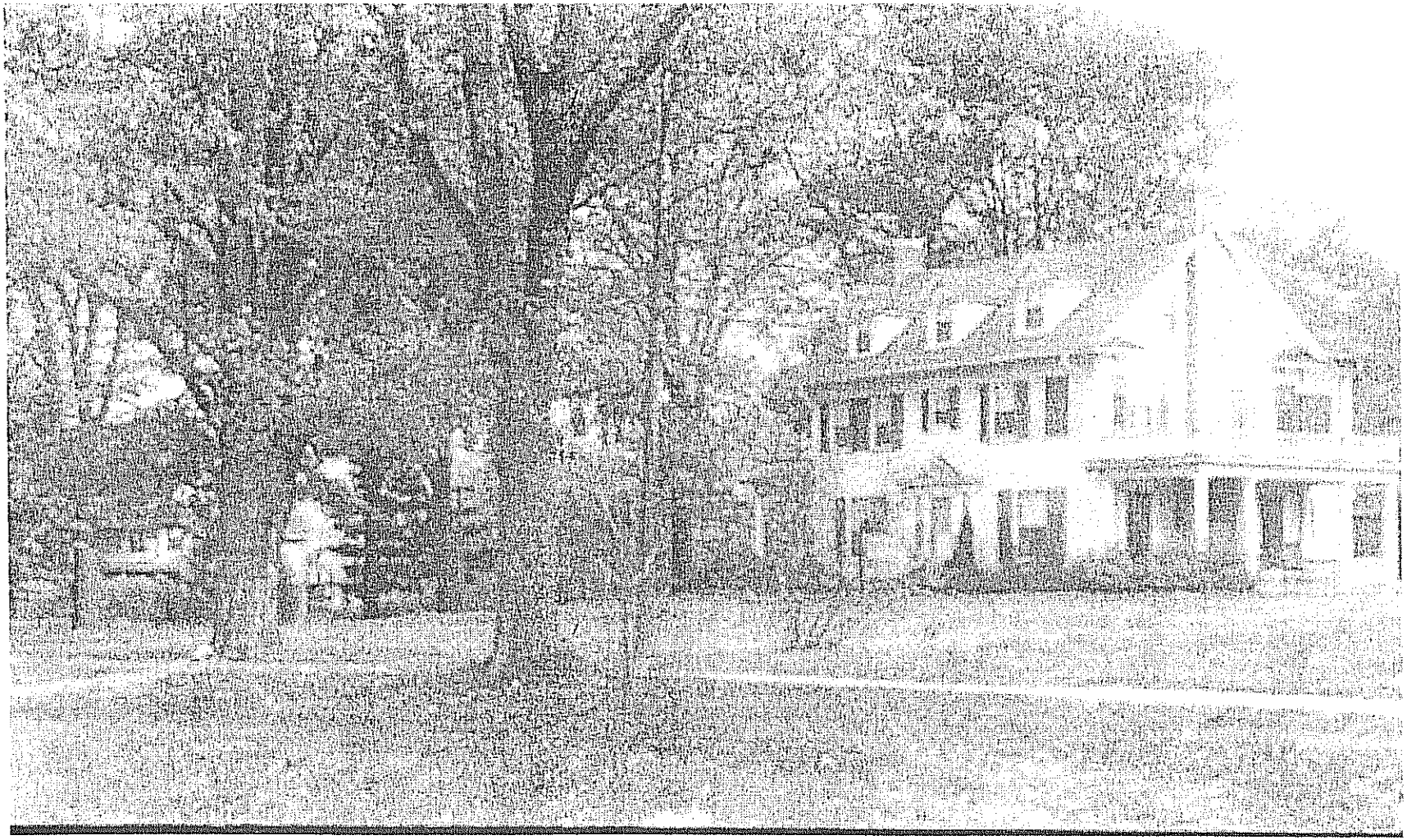

image.png

West Salmon Kill Rd & Rt. 44/41

S'de Walk

image.png

Side-walk early 1900

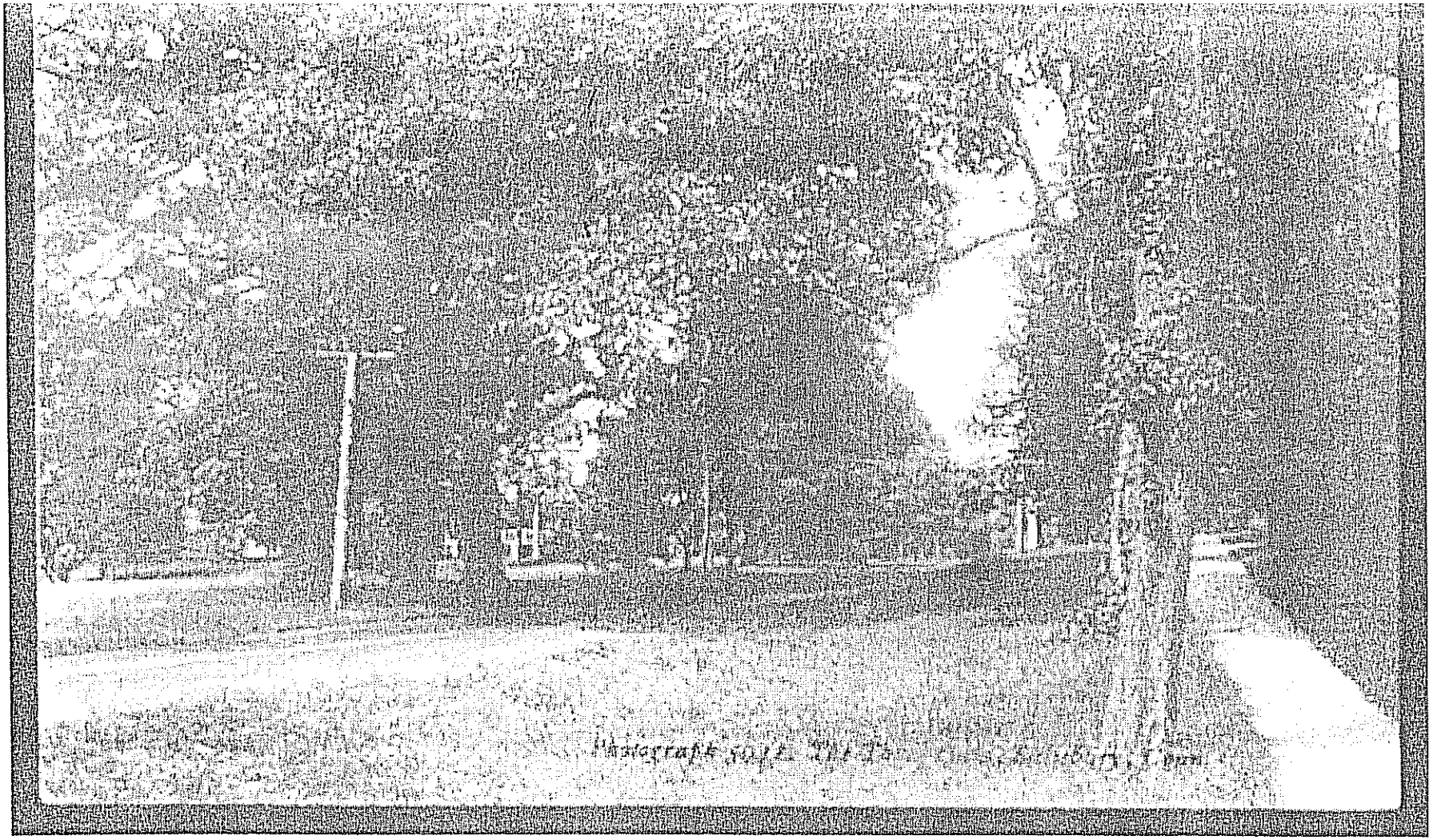

image.png

Looking towards Salisbury on Rt. 44/41

Street, looking west,
Lime Rock, Conn.

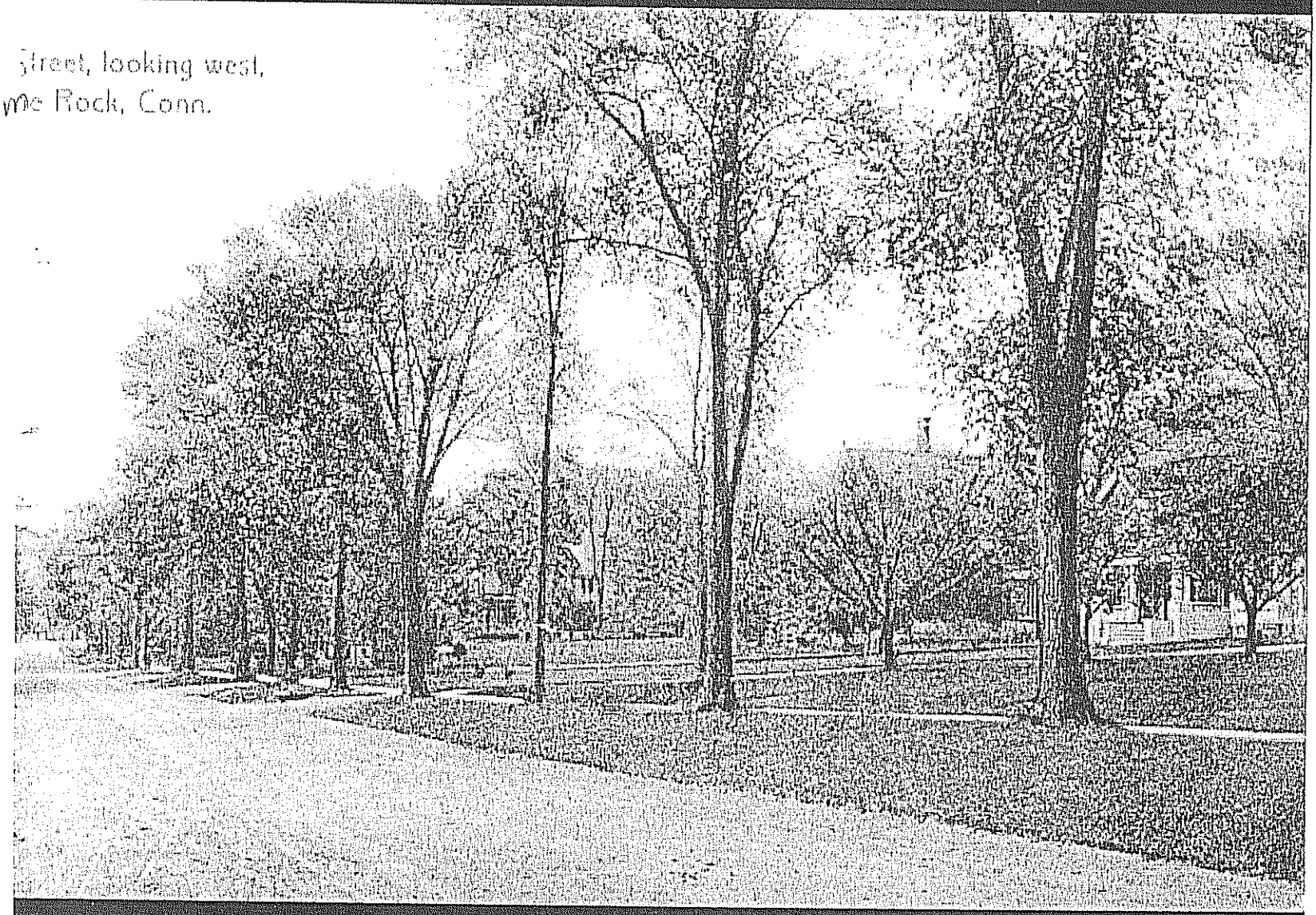

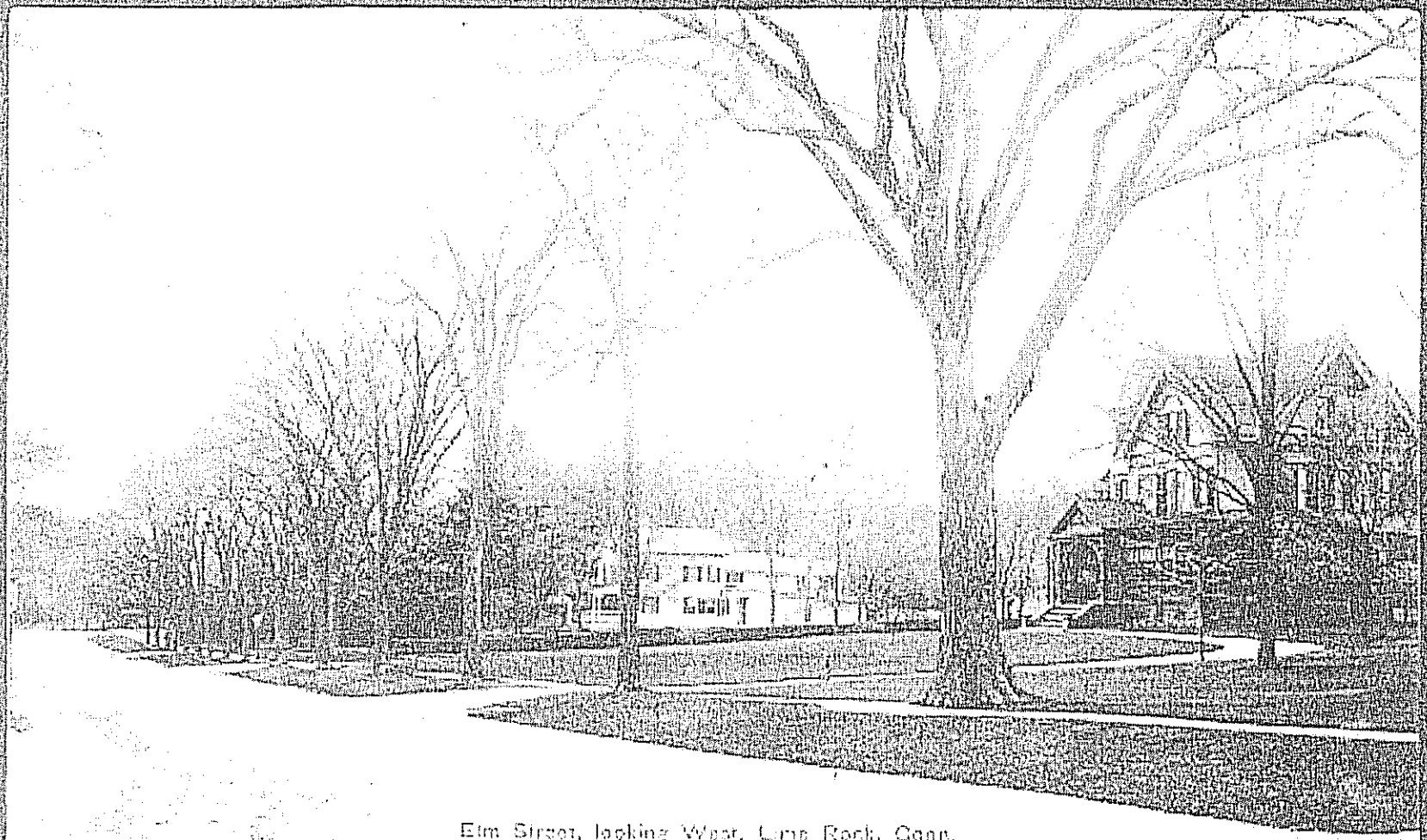

Elm Street, looking West, Lime Rock, Conn.

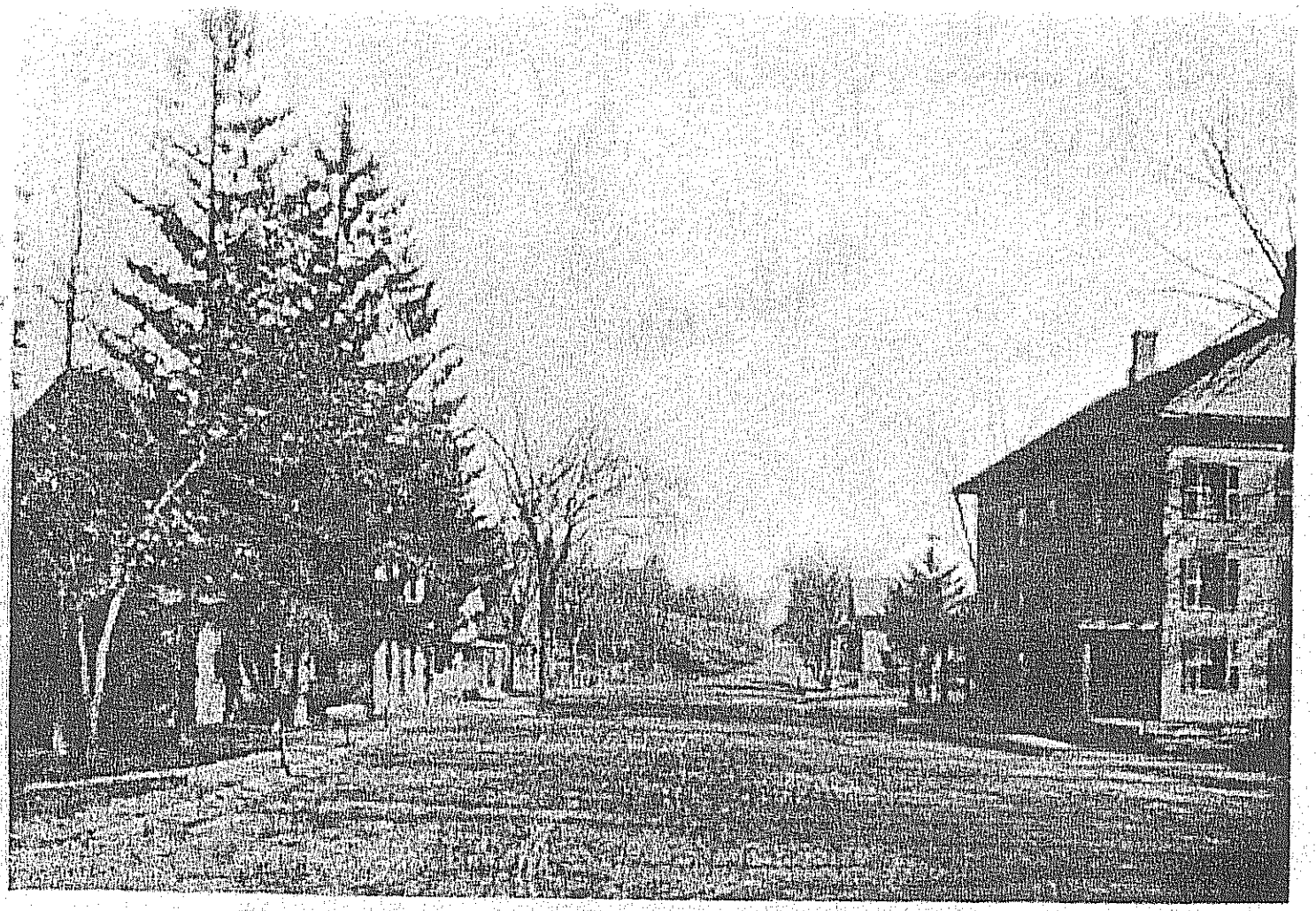

Main Street, Looking East, LIME ROCK, CONN.

image.png

Old Firehouse with sidewalk.

CONCEPT STUDY – Village Principles :

It is important that any development in our village centers happen in such a way that reinforces the overall goals of this Plan of Conservation and Development. Some of the key principles which should guide development and other activities in the village centers include:

Vibrancy / Uses – Villages should be expanded to contain more uses and activities and a variety of uses which all work together to create a vibrant, enticing, and multi-dimensional focal point. Street-level uses should attract people. Housing is an important part of village centers, whether in single-unit, multi-unit, or mixed use buildings (such as retail below with offices and/or apartments above). Housing should be available for singles, families and seniors at many different prices. Uses which do not enhance the village (such as highway garages or similar uses) should be relocated as opportunities arise.

Internal Connectivity – Internal connections and pathways for pedestrians, bicycles, and vehicles are important to the overall function and appearance of a village. To the extent possible, streets and adequate parking areas should interconnect to facilitate circulation and parking efficiency. Future pedestrian connections could include:

- sidewalks in all areas,
- secondary walkways within sites, and
- in Salisbury village, a pedestrian promenade linking Main Street with the Salisbury Winter Sports Association (SWSA) field.

Exterior Connectivity – While state highways provide the most visible means of access to the village centers, other means of access should also be provided and enhanced. For example, the pedestrian/bike path connecting the villages of Salisbury and Lakeville could be extended to surroundings areas (such as the Town Grove).

Appropriate Design – Any new development in a village should be required to conform to the architectural character that presently exists in these areas, complement our historical villages, and retain the character which citizens are so fond of. Establishing "village districts" (per CGS 8-2j) would help preserve the character of these special places.

Investigation / Action – Approaches to enhancing the villages should be studied and then acted on expeditiously. If regulation changes are desirable (for parking requirements, building heights, or setbacks, for example), they should be implemented.

The illustration on the facing page depicts one possible example of how some of the above principles might be applied in Salisbury village.

Supporting The Community We Want To Be (cont.)

Provide For Pedestrians, Bicycles, And Wildlife

Strategies	Leader	Partner	Priority / Status
A. Promote pedestrian improvements in the village centers of Salisbury, Lakeville, and Lime Rock.	Town	PZC	1
B. Encourage improvement of the bike path connection between Salisbury village center and Lakeville village center.	Town		1
C. Seek to establish bike path connections to other areas such as to Millerton, the Harlem Valley Rail Trail, and the Housatonic River Bike Path.	Town		2
D. Consider connecting the Town Grove to Salisbury village via the bike path.	Town		1

Tasks	Leader	Partner	Priority / Status
1. Develop an overall plan for pedestrian and bicycle improvements.	PZC	Town	1
2. Consider placing wildlife crossing warning signs, where appropriate.	PZC	Town	1

Salisbury Pathways Committee

Third Meeting

Date and Time: Monday, October 20, 2014, at 5:30 p.m.

Location: Salisbury Town Hall, Downstairs Meeting Room, first floor.

Present: Katherine Kiefer, Frank Shinneman, Natalia Smirnova, Chris Williams, Pat Hackett

Minutes:

5:37 p.m. – call to order.

1. **Approval of Minutes of September 15, 2014 meeting.**

   Minutes of September 15, 2014 meeting were available online from September 22, and were available in print during the meeting.

   Minutes approved as amended – unanimous.

2. **Discussion of priorities of this committee that coincide with PZC priorities identified in the POCD brochure.**

   POCD brochure was available in print and online during the meeting.

==========

From the POCD, Pg. 28:

Internal Connectivity – Internal connections and pathways for pedestrians, bicycles, and vehicles are important to the overall function and appearance of a village. To the extent possible, streets and adequate parking areas should interconnect to facilitate circulation and parking efficiency. Future pedestrian connections could include:

- sidewalks in all areas,
- secondary walkways within sites, and
- in Salisbury village, a pedestrian promenade linking Main Street with the Salisbury Winter Sports Association (SWSA) field.

Exterior Connectivity – While state highways provide the most visible means of access to the village centers, other means of access should also be provided and enhanced. For example, the pedestrian/bike path connecting the villages of Salisbury and Lakeville could be extended to surroundings areas (such as the Town Grove).

Provide For Pedestrians, Bicycles, and Wildlife

Salisbury should develop strategies to accommodate increased pedestrian and bicycle traffic throughout Salisbury and provide for wildlife passages. We should consider developing additional sidewalks, bicycle lanes and under-

and-over-passes, as well as implementing speed-control measures and widening town roads to provide adequate shoulder space for pedestrians and safe crossings for wildlife.

From the POCD, Pg. 40

STRATEGIES – Pedestrians & Bicycles

A. Promote pedestrian improvements in the village centers of Salisbury, Lakeville, and Lime Rock.
B. Encourage improvement of the bike path connection between Salisbury village center and Lakeville village center.
C. Seek to establish bike path connections to other areas such as to Millerton, the Harlem Valley Rail Trail, and the Housatonic River Bike Path.
D. Consider connecting the Town Grove to Salisbury village via the bike path.

TASKS – Pedestrians & Bicycles

1. Develop an overall plan for pedestrian and bicycle improvements.
2. Consider placing wildlife crossing warning signs, where appropriate.

Discussion:

Chris suggests asking DOT for wide "bike" lane as an alternative to some sidewalks other than the connection between Salisbury & Lakeville. Natalia will ask AEA whether there are any general standards or DOT requirements for a bike lane or minimum lane size. Pat will check his contacts. Kitty will ask Curtis for DOT contact. This will also address speed control by narrowing lanes.

Premise is to encourage safe walking between villages in town.

Rail Trail is not sufficient for home errands, Salisbury School and Hotchkiss.

3. Discussion of presentation to Planning and Zoning Commission at their planning meeting on November 18, 2014.

Kitty volunteered to attend and present. Kitty will present the following points:

A. We want to work in conjunction with P&Z to improve pedestrian access between towns;
B. We are thinking to approach the pathways as an overarching long-term plan with priorities established as follows:
    1. "**The Connector**" between the villages of Lakeville and Salisbury – classic sidewalk as per DOT regulations;
    2. "**The Triangle with Horns**" – Route 41, Cobble Road, Route 41 with extensions to AT on 41 and Lion's head community on 44 – narrowing of the highway (to help with

speed control) and widening the shoulder to accommodate bicycle/pedestrian traffic;

3. **"Around the Lake Wononscopomuc"** area – see attached schema, helping Hotchkiss students and faculty to walk to town, responding to Belgo road residents' concerns, and route 112.
4. **Lime Rock** village.

Kitty will prepare her presentation in more detail and give us an update at the next meeting, which is November 17th.

4. Discussion of key issues on the "connector" and the "triangle" that will determine feasibility.

Priorities of the first step: the **Connector**.

Initially focus on the extension of the existing sidewalk from Meadow Road to Firehouse. This part is crucial to establish the safety of school children since this is part of the Emergency Evacuation Route.

Chris believes that an extension of the culvert would allow a sidewalk to be easily placed on top.

Natalia will contact Salisbury Central School administration to get their opinion on the value of this small addition.

Natalia will contact AEA to find out of the drop of grade in this area is acceptable for the wheelchair accessibility requirement.

Kitty will contact Jocelynn Ayre, Regional Planning.

When all of these are secured, the Committee will ask the Town to perform the feasibility study for this small part. After that study we can project the costs for the connector as a whole.

5. Preliminary agenda for the next meeting, which is Monday, November 17, 2014.

a) Report the progress on all of the above assignments.

b) Re-schedule January 19 and February 16 meetings due to conflicts with federal holidays.

Meeting adjourned at 7 p.m.

Minutes respectfully submitted by Natalia V. Smirnova, Secretary, on October 27, 2014.

Minutes approved as amended on November 17, 2014.

"Around the Lake"

Section

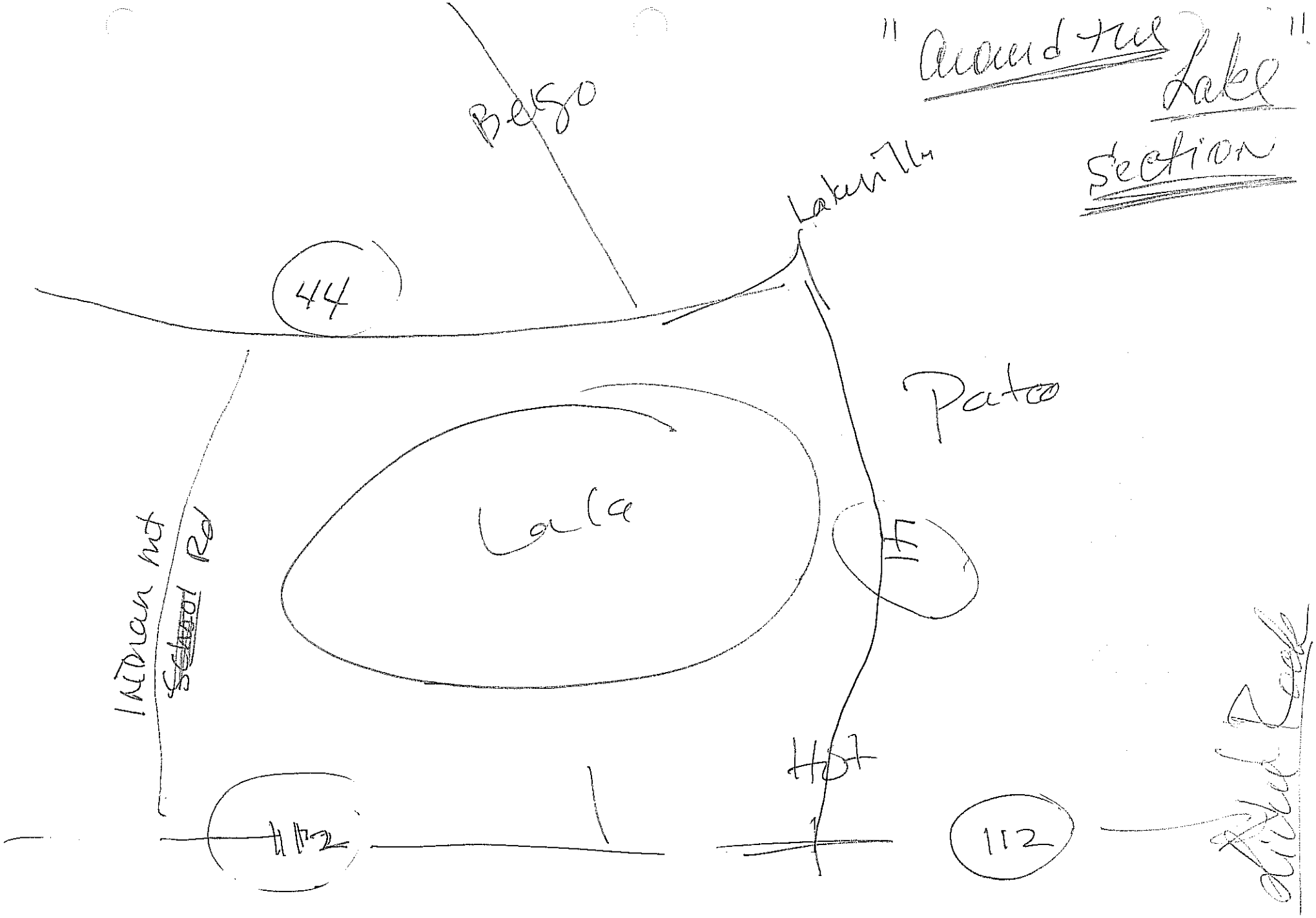

Salisbury Pathways Committee

Fourth Meeting

Date and Time: Monday, November 17, 2014, at 5:30 p.m.

Location: Salisbury Town Hall, Downstairs Meeting Room, first floor.

Present: Katherine Kiefer, Natalia Smirnova, Chris Williams, Pat Hackett

Minutes:

5:30 p.m. – call to order.

1. **Approval of the minutes of October 20th, 2014 meeting:**

   Minutes of October, 20, 2014 meeting were available online from October 27, and were available in print during the meeting.

   Minutes approved as amended – unanimous.

2. **Report progress on all of assignments given at the October 20th meeting.**

   Kitty Kiefer:
   At the next P&Z meeting Kitty Kiefer will present the priorities that we established during last meeting:
   1. "**The Connector**" between the villages of Lakeville and Salisbury – classic sidewalk as per DOT regulations;
   - Within the **Connector** area we will focus on obtaining a feasibility study estimate for the **School Emergency Evacuation Route**, i.e. from Meadow Street to Fire House.
   2. "**The Triangle with Horns**" – Route 41, Cobble Road, Route 41 with extensions to AT on 41 and Lion's head community on 44 – narrowing of the highway (to help with speed control) and widening the shoulder to accommodate bicycle/pedestrian traffic;
   3. "**Around the Lake Wononscopomuc**" area – see attached schema, helping Hotchkiss students and faculty to walk to town, responding to Belgo road residents' concerns, and route 112.
   4. **Lime Rock** village.

   Kitty is to report to this Committee about how the presentation to P&Z went.

   Natalia Smirnova:
   - The letter from Salisbury Central School supporting the **School Emergency Evacuation Route** sidewalk work was obtained and is attached to these minutes. The letter is signed by Ms. Lisa Carter, Principal, and Mr. Claude Rolo, Chairperson of the Board of Education.
   - The answer about the slope requirements was obtained from Robert M. Gilchrest, Project Manager, Allied Engineering Associates, LLC:

"ADA accessible walkways must have the following slope requirements:
Running slope must not exceed 1:20 or 5%...cross slopes may not exceed 1:48 or 2%...ramps may not exceed 1:12 or 8% at all street crossings. The width should be 5' wide, but in areas where 5' cannot be met then there should be 5'x5' areas every 200' to insure that a wheelchair can turn around.

Steep slopes are tough if you are creating an ADA accessible walk. If walk must be greater than 5% then 8% ramps may be used but can only be 30' in length and a landing must be installed between ramp lengths. Also if your walk exceeds 5% then a handrail must be in place.

All these requirements are based on ADA accessibility.

If you are applying for state grant money then you will need to insure that the walk is ADA compliant. You will be doing work in the State's DOT right-of-way and will require an encroachment permit. In order to receive the permit the state will most likely require you to make the walk ADA compliant."

Pat Hackett:
Pat obtained a DOT Policy Statement regarding Complete Streets, which is attached to these minutes. In essence the statement calls for multi-modal transportation encouraging a reduction of reliance on carbon fuels and promoting energy conservation. The statement also geared towards enhancing State economic competitiveness by enabling communities "to become livable, walkable, bikeable, drivable, efficient, safe and desirable". (see last bullet on page 1 of the Policy Statement).

All these new policies will help us to argue for the importance of walkways in Salisbury.

Decision: Based on the discussion the decision was made to ask the Board of Selectmen at the December 8 meeting for the permission to proceed with obtaining a quote for a feasibility study for **School Emergency Evacuation Route**.

3. **Re-schedule January 19 and February 16 meetings due to conflicts with federal holidays.**

Due to the federal holidays on the third Mondays of January and February of 2015, the re-scheduled meetings of this Committee will be held on January 26 and on February 23, 2015.

Meeting adjourned at 6:09 p.m.

Minutes respectfully submitted by Natalia V. Smirnova, Secretary, on November 21, 2014.

SALISBURY CENTRAL SCHOOL
P.O. BOX 1808
45 LINCOLN CITY ROAD
LAKEVILLE, CT 06039

Ms. Lisa Carter
Principal

Ph# 860-435-9871
Fax# 860-435-2689

October 30, 2014

Dear Members of the Salisbury Pathways Committee:

We are writing to express our support for the Salisbury Pathways sidewalk construction project. Each year we conduct an emergency evacuation to the Lakeville Hose Company. All of our students and faculty walk down Route 44 for this effort. Currently the sidewalk ends at Meadow Street. The proposed "Connector" project would continue the walkway all the way to the fire house and make our journey that much safer and easier. This is particularly important for students, faculty and staff who may be on crutches and/or using a wheelchair. In addition, in the event of an emergency that requires the use of both buildings (Salisbury Central is a designated emergency shelter); a complete sidewalk route would facilitate foot travel between the two buildings.

We hope that this input is helpful in your decision-making process.

Sincerely,

Ms. Lisa Carter
Principal

Claude Rolo
Chairperson, Board of Education

cc: Salisbury Board of Selectmen

Success For All

CONNECTICUT DEPARTMENT OF TRANSPORTATION

POLICY STATEMENT

POLICY NO. EX.O. - 31
October 23, 2014

SUBJECT: Complete Streets

This policy is developed in accordance with Section 13a-153f (a)(d) of the Connecticut General Statutes, Accommodations and Provision of Facilities for All Users. It is the policy of the Department to consider the needs of all users of all abilities and ages (specifically including pedestrians, bicyclists, transit users, and vehicle operators) in the planning, programming, design, construction, retrofit and maintenance activities related to all roads and streets as a means of providing a "safe, efficient transportation network which enhances quality of life and economic vitality". Complete streets shall be defined as, for the purposes of this policy, a means to provide safe access for all users by providing a comprehensive, integrated, connected multi-modal network of transportation options.

As a condition of funding, Complete Streets must be considered, in adherence with Public Act 09-154. This policy enables the alignment of transportation funds to encourage improvements for non-motorized users, especially those that connect to transit, schools, and other generators of non-motorized traffic.

OBJECTIVES

- Improve safety and mobility for pedestrians of all ages and abilities, bicyclists, and the mobility challenged, as well as those who choose to live vehicle free
- Develop and support a transportation system that is accommodating of active transportation modes that promote healthier life styles
- Develop and support a transportation system that is accommodating of compact, sustainable and livable communities
- Ensure that the State's transportation network is sustainable through Transportation Demand Management and System Management
- Improve mobility and accessibility to activity centers, including: employers, commercial centers, schools, transit, and trails
- Encourage a shift to alternative transportation modes, reducing reliance on carbon fuels and promoting energy conservation
- Support the State's Transit Oriented Development (TOD) efforts through the provision of integrated transportation networks
- Enhance State economic competitiveness by enabling communities to become livable, walkable, bikeable, drivable, efficient, safe and desirable

The Department shall form a Complete Streets Standing Committee with membership from each Bureau. This standing committee shall be responsible for providing guidance for the implementation of Complete Streets Department-wide.

PROCEDURES

This policy will be implemented via the following actions:

1. Training: The Department will provide training for its engineers and planners on Complete Streets best practices. This training will also be open for registration to municipal engineers, planners and local traffic authorities, Metropolitan Planning Organizations (MPOs) and Regional Planning Organizations (RPOs), as room permits. The Complete Streets Standing Committee will schedule annual training opportunities related to Complete Streets.
2. Checklist: The "Connecticut Department of Transportation Bike and Pedestrian Travel Needs Assessment Form" will be regularly updated to ensure compliance with this policy. This form shall be used at the earliest point in project development for all applicable projects. This form shall apply to all Department projects, mainline utility projects within the state right-of-way, the Office of the State Traffic Administration (OSTA) certificate applications receiving state or federal funding, and municipal transportation projects that receive state or federal funding.
3. Complete Streets shall be considered in all projects receiving state or federal funding. The checklist will be integrated into all Department reviews including Planning, Engineering, Encroachment Permits, Public Transportation, Ferries and Ports, and OSTA Certificate Applications. The checklist will consider all travel modes, environmental and social context.
4. Design Guidance: The Department will amend its design, construction and maintenance guidelines to reflect the routine accommodation of all users. The Complete Streets Standing Committee shall provide input on the development guidance documents. Department design guidance shall reflect best practices for all users.
5. Funding: The Department shall review eligibility of funding sources to increase flexibility for the funding of Complete Streets. The Complete Streets Standing Committee shall work with program managers to refine prioritization criteria in order that all projects reflect complete streets, and projects that focus on bicycles and pedestrians are able to compete with traditional roadway projects for funding appropriately.
6. Data Collection: The Department will include non-motorized users in traffic counts to the extent possible. Turning movement counts associated with OSTA certificate application reviews shall include counts of non-motorized users where appropriate.
7. Performance Measures: The Department shall establish and annually report performance measures, through the Performance Measures Standing Committee. These measures shall be developed in line with federal performance measures for safety and mobility of non-motorized users.

James Redeker
Commissioner

Salisbury Pathways Committee

Fifth Meeting

Date and Time: Monday, December 15, 2014, at 5:30 p.m.

Location: Salisbury Town Hall, Downstairs Meeting Room, first floor.

Present:

- *Committee members*: Katherine Kiefer, Natalia Smirnova, Frank Shinneman, Pat Hackett
- *Citizens*: Chris Brennan, Dan Bolognani

Minutes:

5:30 p.m. – call to order.

1. **Approval of the minutes of November 17th meeting.**

   Minutes of November 17, 2014 were approved unanimously as written.

2. **Progress reports on all assignments given at the November 17th meeting**:

   a. **Our presentation at the P&Z Committee meeting –Kitty Kiefer.**

   Kitty Kiefer reported that at the P&Z Committee meeting on November 18th she presented Pathways Committee priorities, with the goal of working collaboratively with P&Z and integrating our efforts when possible. Kitty reported that the replacement/enhancement of the sidewalk in Lakeville village was brought up to be included in our priorities. At the meeting Kitty said that since the Lakeville village already has sidewalks in place, this could be the last priority for us, after the other four priorities are completed.

   b. **Sidewalks in the State ROW – Pat Hackett.**

   Pat summarized his conversation with Peter Talarico from ConnDOT on December 2, 2014.

   1. Peter said that there is not much funding out there – stressed this point numerous times. Said it would be best locally funded and done with encroachment permit through the local District IV. If done using this route (no pun intended), it may require an engineer from Newington to review.

2. Said some parts start with the RPA.
3. Said 44 did not look too good and will most likely be overlaid within the next 5 years or so.
    a. They have a policy now to provide as much shoulder as possible by restriping after the overlay;
    b. The lanes would most likely need to be a minimum of 11' wide but we should look into the possibility of 10' as a road calming measure;
    c. It might be possible to widen certain shoulders in anticipation of the overlay that would accomplish a more consistent road shoulder.
4. Said there is a plethora of regulations and guidelines for sidewalks, mentioned the 2% cross slope is a definite, mentioned the longitudinal grade is amendable if there is no recourse.

Pat provided descriptions/regulations of Roadside Elements (attached), and Special Design Elements (attached) from DOT guidelines.

c. Estimate for the feasibility study for pathway from SCS to the Fire House – Natalia Smirnova.

Natalia presented a good faith estimate for a feasibility study from Robert Gilchrest of AEA – Allied Engineering Associates, LLC., sent to her via e-mail on December 1, 2014. Natalia mentioned that she approached AEA on behalf of the Committee to get a ball park estimate with the understanding that such an estimate is for the information purpose only. She emphasized that if the funding is allocated to a feasibility study, AEA is still eligible to participate in a bidding process.

Here is the excerpt from the e-mail:

Salisbury Pathways Project

Meadow Street to Brook Street (New Firehouse)

Feasibility Study/Schematic Design

Estimated Fee: $2,500 (3.7% of Project Cost)

<u>Services to include the following:</u>

1. Mapping Research *(1/2 day)*

2. Preliminary Base Map *(1 day)*
3. Site Visit *(1/2 day)*
4. Preliminary Layout (1/2 day)
5. Potential Cost based on Schematic Design *(1/4 day)*
6. Present to committee *(1/4 day)*

Potential Pre-design Estimate (based on 800 LF 5' walk):

Walk excavation:	$1,500
Earthwork/Grading:	$2,000
Existing driveway removal:	$1,500
New walkway base:	$5,000
New 5' concrete walk:	$13,500
Pedestrian bridge over drainage swale:	$35,000
Traffic control:	$6,500
Seeding/landscaping:	$2,000
TOTAL:	**$67,000***

*does not include contingency, design fees, surveying, permitting, taxes, and contractor's overhead and profit

Bob

Robert M. Gilchrest, Project Manager
Allied Engineering Associates, LLC
95 Main Street, 3rd Floor
P.O. Box 726
North Canaan, CT 06018
860.824.1400

d. Our presentation at the December 8th Selectmen meeting – Kitty Kiefer.

Kitty said that she did not bring up anything pertaining to the pathways Committee at the December 8th meeting. However, now since we discussed the AEA quote, she will make sure that we get on the agenda of January 5th Selectmen meeting to ask to allocate the funding of $2,500 for a feasibility study of the extension of sidewalk from meadow Street to the New Fire House.

3. **New business.**

Kitty Kiefer said that she finally got to talk to Jocelyn Ayer, Community and Economic Development Director, Northwest Hills Council of Governments about the Fall Village Main Street development project. In summary, either STEAP or Main Street Investment fund are the sources of funding for the pathways in Salisbury. A copy of Falls Village application is attached to these minutes.

4. **Citizens' comments.**

- Chris Brennan, Salisbury Resident:
    - I am supportive of the initiative to extend sidewalks between villages and around Salisbury. It will be great to get a STEAP grant. Make sure to find what the grant deadline is and make sure not to miss a deadline. Count backwards to know when the feasibility study has to be completed.
    - I suggest to invite parents of Salisbury Central School (SCS) to attend the January 5th Selectmen meeting and support the request for funding of the feasibility study for the sidewalk extension between Meadow Street and the Fire House. I think parents will be very interested in supportive of such an important safety measure for the school, since this route is an Emergency Evacuation Route for school children, teachers and staff. I suggest to use school communication channels to inform the parents.

Natalia Smirnova will connect with Ms. Carter to inquire about the best communication with parents regarding informing them about the issue and about the January 5th Selectmen meeting.

- Dan Bolognani, Upper Housatonic Valley national Heritage Area, Salisbury Resident:
  Making community bike and walk friendly is a good idea. Healthy lifestyles, safety for children, and expansion of commerce – all these are important for the community. It makes our area attractive to visitors. The ability to walk to and around town will make the villages a focal point of tourist visits.
  Dan is an Executive Director of Upper Housatonic Valley National Heritage Area (www.HousatonicHeritage.org), organization that has a vision of this area to become part of the Western New England Greenway, which connects NYC with Montreal through bike routes. Dan sees the opportunity of his organization to interact with the Pathways Committee in order to promote healthy lifestyles and expansion of commerce. Dan encouraged us to look for partnership opportunities and collaborate with various

organizations that are promoting the similar things. For example, if we connect with BikeWalkCT and explain what we are trying to do in Salisbury, they will be very happy to hear that we are a bike-friendly community. In Dan's view, we will be the "pilot" for such collaborative work, and will be an example for other communities to be replicated.

Frank Shinneman will try to connect to the organizations mentioned by Dan in order to establish collaborative networks.

5. Preliminary agenda for January 26, 2015 meeting:

1) Report STEAP grant schedule;
2) Report the outcome of January 5th Selectmen's meeting request for $2,500 grant for feasibility study of the sidewalk extension from Meadow Street to Fire House.
3) Report on the outcome of the attempt to connect with various organizations, which are working to support walking and biking in our area.

Meeting adjourned at 6:12 p.m.

Minutes respectfully submitted by Natalia V. Smirnova, Secretary, on December 22, 2014.

Minutes approved unanimously as written on February 23, 2015.

10-2.0 ROADSIDE ELEMENTS

10-2.01 Sidewalks

10-2.01.01 Guidelines for Sidewalk Construction

ConnDOT Policy "HWYS-19 — SIDEWALKS" provides the Department's guidelines for when a new sidewalk should be considered or where an existing sidewalk should be replaced. This Policy also discusses the State's municipalities' funding and maintenance responsibilities.

10-2.01.02 Sidewalk Design Criteria

In determining the sidewalk design, the designer should consider the following:

1. Widths. Sidewalk widths may vary from 4 ft to 8 ft with 5 ft considered typical. On bridges, the typical width is 5.5 ft. High pedestrian volumes may warrant widths greater than 5 ft. In special cases (e.g., schools), the designer may need to conduct a detailed capacity analysis to determine the sidewalk width. Use the *Highway Capacity Manual* for this analysis.

2. Central Business District (CBD) Areas. The entire area between the curb and building is often fully used as a paved sidewalk.

3. Appurtenances. The designer should also consider the impacts of roadside appurtenances within the sidewalk (e.g., fire hydrants, parking meters, utility poles). These elements will reduce the effective width because they interfere with pedestrian activity. Preferably, place these appurtenances behind the sidewalk. If they are placed within the sidewalk, the sidewalk should have a minimum clear width of 3 ft to 4 ft. The clear width will be measured from the edge of the appurtenance to the edge of the sidewalk. The 3-ft minimum is necessary to meet the ADA requirements (see Section 15-1.0).

4. Cross Slope. The typical cross slope on the sidewalk is 2% towards the roadway. If the sidewalk is on an accessible route for disabled individuals, then the maximum cross slope will be 2% (see Section 15-1.0).

5. Buffer Areas. If the available right-of-way is sufficient, consider providing a buffer area between the curb and sidewalk. These areas provide space for snow storage and allow a greater separation between vehicle and pedestrian. The buffer area should be at least 2 ft wide to be effective. Provide a 2.5 ft wide separation where the strip accommodates utility poles with a minimum 1.5 ft clearance from the curb face. The designer should consider providing buffer areas between 8 ft and 10 ft wide. Buffer areas may also be used for the placement of roadside appurtenances, if necessary. However, this is undesirable because the proximity to the traveled way increases the likelihood of vehicle/fixed-object crashes. Also, their presence in buffer areas detracts from the appearance of the highway environment.

Section 13b-17-27 of the Department's "Highway Encroachment Permit Regulations" contains additional information related to the design of sidewalks. Section 15-1.0 of the *Highway Design Manual* contains information related to accessibility requirements for disabled individuals that applies to sidewalk design.

10-2.02 Fill and Cut Slopes

Fill and cut slopes should be designed to ensure the stability of the roadway and be as flat as practical to enhance roadside safety. Much of the necessary information for design will be provided in the Soils Report, if one is necessary for the project. The designer should consider the following when selecting a fill or cut slope design:

1. Fill Slopes. Fill slopes should be 1:6 or flatter. All soils will be stable at this rate. Maintenance efforts are greatly reduced, the erosion potential is reduced, and the slopes are traversable at 1:6. For fill heights between 10 ft and 25 ft, 1:4 slopes are acceptable. For fill heights greater than 25 ft, 1:2 slopes protected by guiderail are typical. If site conditions require a slope steeper than 1:2, slope-retaining structures are normally used. The geotechnical engineer must approve any proposed slope steeper than 1:2. The typical section figures in Chapters Four and Five provide additional information on slope rates for various classes of highway.

2. Clear Zones. The steeper the fill slope, the greater the clear zone will be where guiderail is not provided (see Figure 13-2A).

3. Slope Rounding. Round slope transitions adjacent to shoulders at the top of fills. As indicated in the typical cross section figures in Chapters Four and Five, the recommended rounding is 8 ft. Measure this from the edge of the shoulder to where the rounded section intercepts the fill slope. For safety purposes, this will be sufficient with one exception. Where the design speed is 70 mph and where an unprotected 1:4 slope is provided, the recommended rounding distance is 11 ft. (Note: Rounding is not necessary on fill slopes protected by guiderail).

   The typical rounding at the toe of a fill slope and at the top of a cut slope is 10.0 ft.

4. Erosion Control. Erosion possibilities should be minimized. To the extent practical, preserve the natural and existing drainage patterns. Severely rutted side slopes can cause vehicular rollover even on relatively flat slopes. In good soil, turf can be established on slopes as steep as 1:2. However, flatter slopes obviously reduce the erosion potential and should be used where feasible. The Department's *Drainage Manual* discusses erosion prevention in more detail.

5. Rock Cuts. Slopes up to vertical are possible in rock cuts using presplitting methods. Where practical, place the bottom of the rock-cut slope outside of the calculated clear zone. All jagged rock outcroppings exposed to possible vehicular impacts should be removed. Figures 4J and 5L provide details for rock cuts. The geotechnical engineer will determine the appropriate slope in rock cuts.

6. Earth Cuts. In earth cuts, a rounded swale will normally be provided. Deep earth cuts may warrant terracing. These reduce erosion and enhance soil stability. The recommendation of the geotechnical engineer will govern.

7. Slope Protection. Generally, earth cut or fill slopes should be 1:2 or flatter to ensure a stable slope upon which turf may be established. Under favorable soil conditions, earth slopes as steep as 1:1.5 may be used, provided a proper slope protection system is used.

   The slope protection system selected should be consistent with the context of the design and the surrounding environs. Because the treatment of slopes can greatly influence the public's acceptance and overall success of a project, the designer should consult with the geotechnical engineer, structural engineer, and landscape architect to identify appropriate slope protection alternatives. Where a vegetated slope is not a feasible alternative, crushed stone slope protection may be considered. However, due to its undesirable impact on aesthetics, minimize the use of this treatment.

10-2.03 Utilities

Consider the following:

1. Placement. Space for the placement of utilities is an integral part of the highway design process. To ensure adequate space for the placement of utilities, the designer should consider utility placement early in the design phase of a project's development.

2. Utility Test Pit Data (Cross Sections). For actual utility test pit data, show the existing location(s) of the underground utilities on the cross sections. Do not show theoretical (interpolated data between two actual test pits) location(s) of existing underground utilities on the cross sections.

From: **Jocelyn Ayer** jocelyn@nwctplanning.org
Subject: Main Street Investment Funding
Date: December 12, 2014 at 10:51 AM
To: Kitty Kiefer beesweet1@gmail.com

Hi Kitty- this may be a better STEAP project, not sure but either way (whether STEAP or Main Street Investment Fund) you'd still need to get George to do some drawings and a cost estimate to have a competitive application. Attached is the Falls Village Main Street Investment fund application that I helped them with which was successful. I don't seem to have an electronic version of the drawings George did for the application- I think we just submitted a hard copy...but George would have that. Again, happy to help with a STEAP or Main Street application if the town wishes to pursue these sources of funding...
Best, Jocelyn

--

Jocelyn Ayer
Community & Economic Development Director
Northwest Hills Council of Governments
office: 860-868-7341
email: jayer@northwesthillscog.org
website: www.northwesthillscog.org

Discover the Secret Corner of NWCT at: www.discovernwct.com

Application

Main Street Investment Fund

1. APPLICANT INFORMATION

Municipality: Town of Canaan

Mailing Address: Town Hall, P.O. Box 47, Falls Village, CT 06031

Name of Authorized Official: Patricia Allyn Mechare Title: First Selectman

Telephone #: 860-824-0707 Fax #: ____

Email: canaan021selectmen@comcast.net Municipality FEIN number: 06-600-1969

Municipal population as per the latest federal decennial census: 1,234

STEAP Municipality ☒ Yes ☐ No

Grantee's Fiscal Year: From July 1 To June 30

Total Project Cost: $522,699 Amount of Funding Requested: $500,000

Name of Project Contact: Jocelyn Ayer Title: Senior Planner, NWCT RPC

Telephone #: 860-806-5696 Fax #: ____

Email: jocelyn@nwctplanning.org

2. LOCAL APPROVALS

a. Submit a certified resolution adopted in the last 60 days by the municipality's legislative body:
- Authorizing submission of this grant application;
- Identifying the individual who can sign the grant application and administer the grant.

The certified resolution should be signed by the City or Town Clerk and embossed with the corporate seal. See **Appendix A** for sample resolution.

b. Submit a certified statement from the town manager or town engineer that the work performed or to be performed has received proper building permits and that the work has been or will be inspected by the town.

3. PRIVATE OWNER INFORMATION (APPLICABLE ONLY if the applicant is seeking funds to reimburse owner of commercial private property)

Owner Name: ____

Project Address: ____

Owner Business Name and Address: ____

Contact Name: ____ Title: ____ Telephone #: ____

Fax #: ____ Email: ____

Total Project Cost: $____ Amount of Funding Requested: $____

4. PROJECT INFORMATION

Is there a "plan" that is previously approved by the governing body of the municipality to develop or improve town commercial centers to attract small businesses, promote commercial viability, and improve aesthetics and pedestrian access? ☒ Yes ☐ No

If no, your municipality is not eligible for funding under this program. If yes, please submit a copy of the plan including the approval of the governing body.

In 1000 words or less, summarize how the project will attract small businesses, promote commercial viability, and improve aesthetics and pedestrian access: This project would create a connected, ADA compliant, historically appropriate, sidewalk running from the Inn (at one end of the village center) to the elementary school (at the other end). It would also add historically appropriate lighting to light the new sidewalks. Bump-outs with landscaping and street trees will help slow traffic, better define parking areas, and make Main Street more attractive. The Town's historic Green plays host to many events held in the village center. The Green would be improved with additional landscaping, trees, and a gazebo which could be used for bands during events or for a place to sit and enjoy the scene. When completed, the new sidewalks and streetscaping will invite visitors and residents to stroll down Main Street and attract new small businesses to the vacant commercial spaces. It will also help bring additional customers to the existing businesses and make them want to come back to experience all Falls Village has to offer.

Municipal Project

Project Title: Falls Village Sidewalks & Streetscaping Project

Is property owned by the municipality?: ☒ Yes ☐ No

If no, who is the property owner and does the applicant have proper authorization/access agreement from the owner to enter the property or work on the property? ____

Is project ready to be implemented ☒ Yes ☐ No.

What is the total project cost? $522,699. Provide a copy of the estimates.

Source of these estimates: Architect/Engineer ☒ Contractor ☐ Municipality ☐

Are there other sources of funds for this project: ☐ Yes ☒ No Amount: $____

Is the project consistent with the State Conservation and Development Policies Plan? ☒ Yes ☐ No Explain #1"Redevelop & Revitalize Areas w/ Existing Infrastructure".

Eligible activities to be funded by this grant: sidewalk construction, street lighting, landscaping

Owner/s of the commercial private property (APPLICABLE ONLY if the applicant is seeking funds to reimburse owner of "commercial" private property)

Project Title: _____

Is the project complete? ☐ Yes ☐ No

Has the town reviewed the invoices for the costs to be reimbursed?: ☐ Yes ☐ No

Provided/attached invoices for reimbursement?: ☐ Yes ☐ No

Has the town conducted final inspection of the project?: ☐ Yes ☐ No

Who performed the work? Explain.

Is the project consistent with the State Conservation and Development Policies Plan?
☐ Yes ☐ No Explain _____.

Provide reasons for town recommendations for eligible activities to be reimbursed by this grant: _____

Are there other sources of funds for this project: ☐ Yes ☐ No Amount: $_____

5. PROJECT PLAN

Submit a detailed project plan which describes (1) the proposed use of the grant funds; (2) the way in which the use of the funds will develop or improve town commercial centers to attract small businesses, promote commercial viability, and improve aesthetics and pedestrian access; (3) a schedule for (a) the use of the funds; and (b) completion of the project; AND (4) project drawings/plans.

6. PROJECT BUDGET (see Appendix B for a sample budget)

ELIGIBLE PROJECT EXPENDITURES	TOWN SHARE	STATE SHARE	OTHER SOURCE* Private
1. Excavation	$____	$38,703.00	$____
2. Street Lights	$____	$58,500.00	$____
3. Sidewalks	$____	$271,646.00	$____
4. Curbing	$____	$75,040.00	$____
5. Pavement	$____	$12,858.00	$____
6. Landscaping	$____	$12,952.00	$____
7. Gazebo	$11,349.00	$30,301.00	$11,350.00
8.	$____	$____	$____
9.	$____	$____	$____
10.	$____	$____	$____
Total Project Expenditures	$11,349.00	$500,000.00	$11,350.00

* Identify other source – such as Private owner or Federal, etc. Use this column to show the reimbursement to commercial private owner.

My signature below, for and on behalf of _____, indicates
Name of Grantee
acceptance of the following and further certifies that:

1. I have the authority to submit this grant application;
2. I will comply with the General Grant Conditions and Special Conditions, if any;
3. I understand that funding associated with this grant application is one-time in nature and that there is no obligation for additional funding from the Office of Policy and Management or the State of Connecticut;
4. I understand that should this grant application be approved, such state funds shall be expended within the time frame specified in the Notice of Grant Award (NOGA);
5. I understand that requests to extend the grant end date shall be submitted in writing to the Office of Policy and Management no later than thirty (30) days before the grant end date as specified in the NOGA;
6. I understand that unexpended funds shall be returned to the State of Connecticut within sixty (60) days of the grant end date;
7. I understand that if this organization meets the requirements of the State Single Audit Act, Sections 4-230 through 4-236, as amended, of the Connecticut General Statutes, the organization is required to submit a State Single Audit, at its own expense, no later than six (6) months after the end of the audit period. If this organization is not required to submit a

Checklist of required Documents

Identify documents submitted with the Application:

- ☒ Attachment 1: Legislative Body Resolution
- ☒ Attachment 2: Certified Statement
- ☒ Attachment 3: Project Location Map and a map of the Town Commercial Center
- ☒ Attachment 4: A copy of approved Plan with a copy of the resolution adopted by the Governing body approving the Plan
- ☒ Attachment 5: Cost estimates
- ☐ Attachment 6: Contracts with architect/engineers and contractors, if applicable
- ☒ Attachment 7: Project drawings/plans, if applicable
- ☐ Attachment 8: Invoices from the commercial private owner for reimbursement, when available

Proposed use of funds

This project proposes to use grant funds to construct an attractive, ADA compliant, historically appropriate bluestone sidewalk (with a concrete base) running from one end of Main Street to the elementary school at the other end of Main Street all within the Town's right of way. Grant funds would also be used to install curbing and bump-outs with landscaping and street trees to help slow traffic, better define parking areas, and make Main Street more attractive. Funds would be used for landscaping and the purchase and planting of trees in the town's main green space, it's historic Green. Additionally this project proposes using grant funds to purchase and install a gazebo in the Green to be used for events that bring people to the Town Center and create an attractive seating area and focal point for the Green.

These funds would help leverage the other recent public and private investment in the Town's commercial center including public (STEAP funding) investment in the Library and Children's Theater, and private investment in the cafe, inn, and country store as more fully described in the Town Commercial Center Plan (Attachment 4).

This project is one crucial ingredient in a larger initiative currently underway to help support existing village center businesses and attract new small businesses as described in the Town Commercial Center Plan (Attachment 4) including Village Center signage and marketing projects. A new visitor website has been launched that describes Falls Village's attractions (www.discovernwct.com/falls-village/) and new signage directing visitors to the village center will be installed this fall.

Description of how funds will improve Falls Village

Improving aesthetics and pedestrian access:

Canaan's village center, Falls Village, has an historic Main Street with a newly renovated Inn & tap room, country store, cafe, church converted into a children's theater, elementary school and stone library, all within close walking distance to each other and the Great Falls. Main Street also has three vacant storefronts and a wide swath of pavement without well defined parking or landscaping. There is a very limited sidewalk in front of Town Hall, a narrow strip of blacktop on the opposite side of the street, and a few other short, disconnected sections of sidewalk. This project would create a connected, ADA compliant, historically appropriate, bluestone sidewalk running from the Inn (at one end of the village center) to the elementary school (at the other end of the center) as shown in the Project Plan (Attachment 7). It would also add historically appropriate lighting to light the new sidewalks as current lighting leaves

large areas of the village center in the dark. Bump-outs with landscaping and street trees will help slow traffic, better define parking areas, and make Main Street more attractive.

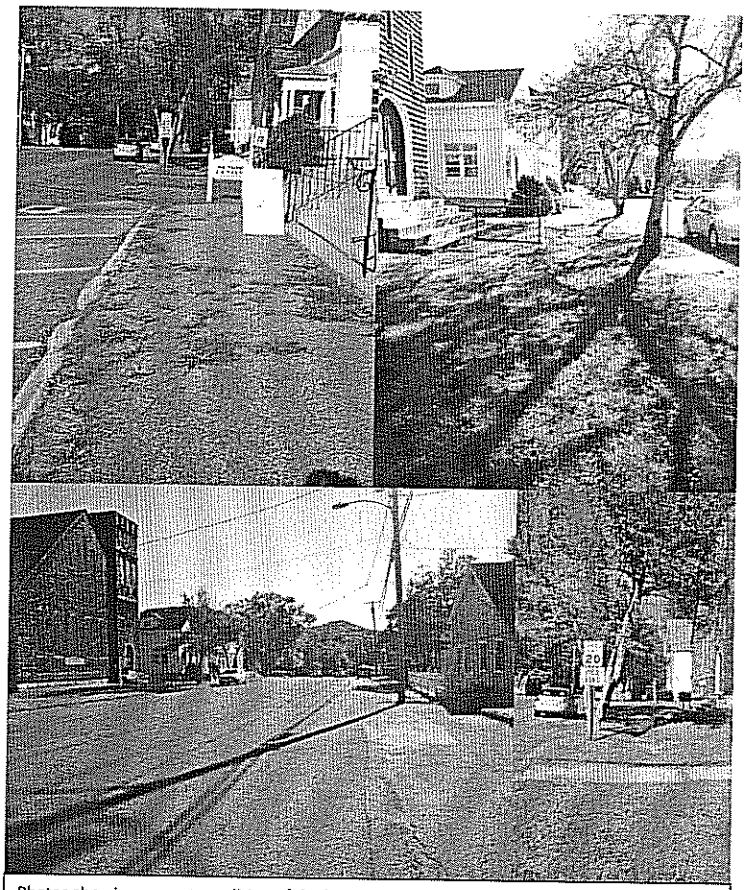

Photos showing current condition of the limited patchwork of existing sidewalks on Main Street where new sidewalks are proposed. Photos also show the wide, undefined street with a lack of defined parking, streetscaping, and sidewalks.

Attracting small businesses and promoting commercial viability

At the end of Main Street is a red caboose which once served as a visitor information center (visitor info board sits next to the caboose). This project also proposes a stone dust footpath from the caboose & visitor info area to lead visitors to the Great Falls and additional walking trails (linking visitors to the historic bridge over the river and Appalachian Trail). The Town's historic Green which sits between the inn and the senior center (upstairs) and country store (downstairs) plays host to many events held in the village center. The Green would also be improved through this project with additional landscaping and a gazebo which could be used for bands during events or for a place to sit and enjoy the village center.

The Green is also in danger of losing one of its very large old trees due to its age and safety concerns, this project would allow the Town to add new trees now which could mature quickly so that the Green remains attractively adorned with trees and shade. The Falls Village Inn has been in the center of town since 1834. In 2010 it was beautifully restored and has once again become a popular destination for locals and visitors who love to dine on the porch overlooking the Town Green. P.D. Walsh Country Store which also borders the Green, has a weekly music night that would also benefit from additional pedestrian traffic and street lighting. When completed, the new sidewalks and streetscaping will invite visitors and residents to stroll down Main Street and attract new small businesses to the vacant commercial spaces. It will also help bring additional customers to the existing businesses (inn, cafe, and country store) and make them want to come back to experience all Falls Village has to offer.

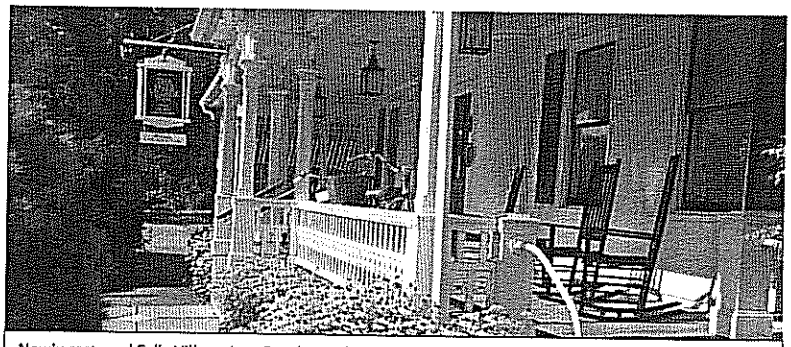

Newly restored Falls Village Inn. Porch overlooks the Town Green.

Photos showing P.D. Walsh Country Store, Toymakers Cafe, caboose & visitor information board, and vacant commercial space on Main Street.

The Historical Society's museum & office are also located in the village center in the historic Falls Village Depot. *"The Falls Village-Canaan Historical Society has produced an architectural walking tour that encompasses the historic district (village center), and the improved sidewalks and lighting will enhance the users experience will this self guided tour. The Historical Society also holds historic house tours that will benefit from the upgrades to the village center. The Historical Society is pleased to endorse this project as it will enhance the beauty and historic significance of our Village Center, and also stimulate economic growth to our town." –Falls Village-Canaan Historical Society.*

The D.M. Hunt Library is also very active in hosting events which bring residents and visitors to the village center including its monthly book sales, art shows, presentations by local and other authors, their annual "Chocolate & Chili in the Village" and "Auction in the Village" events.

Library guests will be more inclined to walk from an event at the library to Toymakers Cafe, P.D. Walsh Country Store or the Inn for a bite to eat if there was a safe, attractive, and defined sidewalk to lead them there.

Time schedule & management plan

This project can be completed within 180 days of the construction start date. The Town would hope to begin this project in the spring and complete the majority of the sidewalk installation by the beginning of the summer. This project will not interrupt traffic (Main Street is wide and traffic will be able to move around construction) and care will be taken to assure that cars can access businesses and parking during business hours. The gazebo can also be installed in the spring to be ready for summer events and the tree planting in the Town Green can happen in fall. The project would be managed by the Town's First Selectmen in cooperation with the selected engineering firm. This project has not yet gone out to bid but the Town has invested its funding to hire Allied Engineering Associates to develop the Project Plans (attachment 7) and cost estimates (attachment 5) submitted as part of this application.

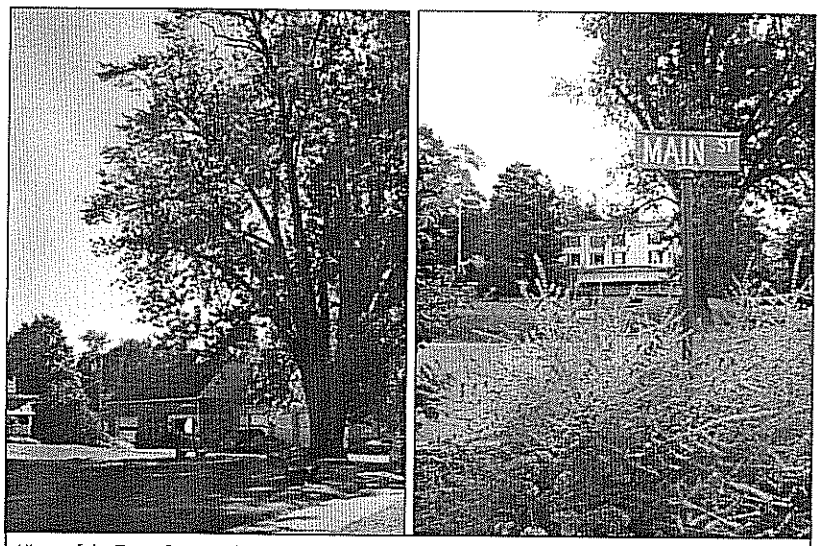

Views of the Town Green, Falls Village Inn, and the large, old tree that may need to be removed due to safety concerns.

Attachment 3: Project Location Map & Map of the Town Commercial Center

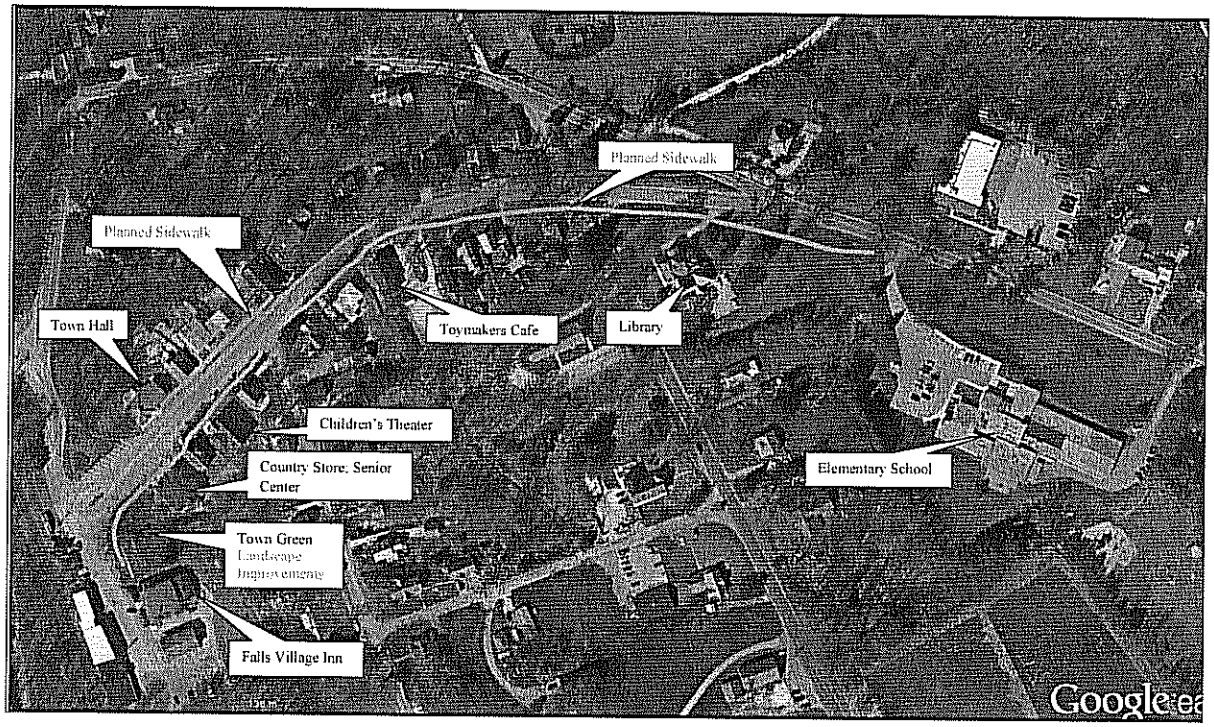

Planned Sidewalk

Attachment 3: Project Location Map & Map of the Town Commercial Center

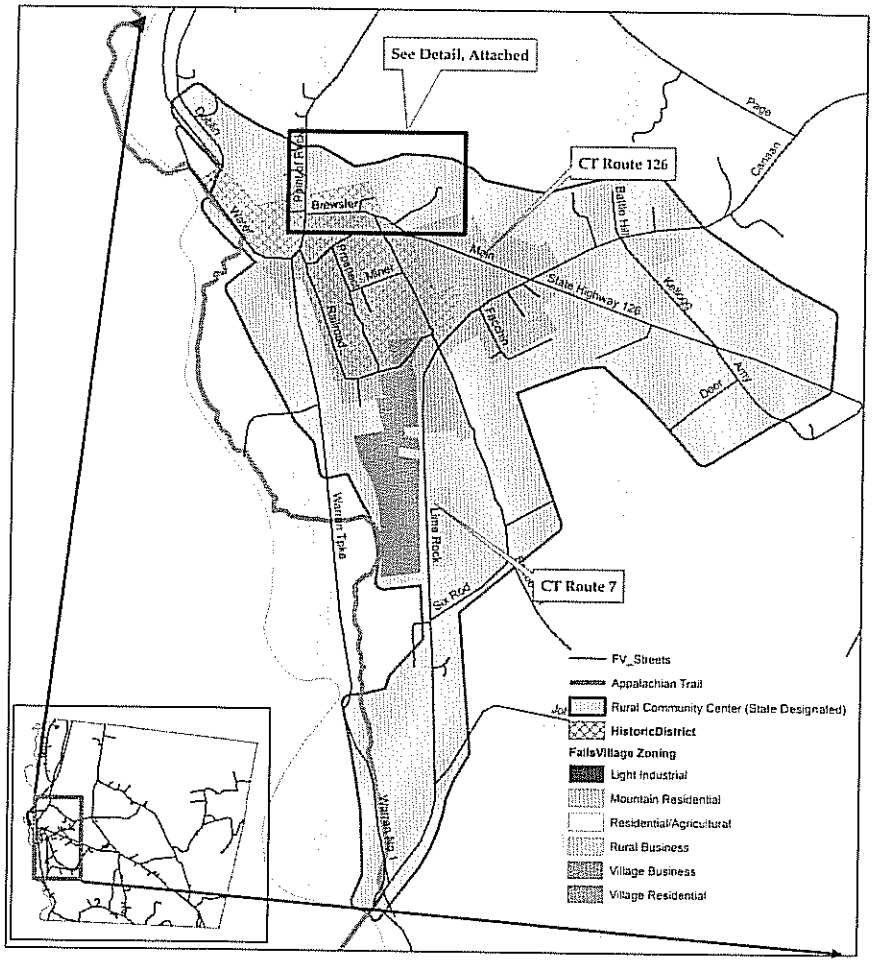

Canaan (Falls Village) Connecticut

Allied Engineering Assoc LLC
95 Main Street, 3rd Floor – East
PO Box 726
Canaan, CT 06018
860-824-1400
860-824-1401 fax
allied-engineering@snet.net

Town of Canaan, CT
Main Street Grant Application
Engineering Estimate

Excavation, Saw Cutting, Demolition, Traffic Control	$ 38,703
Street Light, Installation and Wiring	$ 58,500
Bluestone, Concrete, Sidewalks, Stairs	$ 271,646
Granite Curbing	$ 75,040
Pavement Replacement and Striping	$ 12,858
Street Trees, Topsoil, Seeding	$ 12,952
Gazebo, Installation	$ 53,000
Total	$522,699

AEA Project # 446 9/24/12

Natalia Smirnova

From:	Robert Gilchrest <aea.bobg@gmail.com>
Sent:	Monday, December 01, 2014 12:01 PM
To:	Natalia Smirnova
Cc:	George Johannesen
Subject:	RE: Quote for a Feasibility Study

Natalia- Hope you had a great Holiday...as requested please find below the information you were looking for:

Salisbury Pathways Project

Meadow Street to Brook Street (New Firehouse)

Feasibility Study/Schematic Design

Estimated Fee: $2,500 (3.7% of Project Cost)

Services to include the following:

1. Mapping Research *(1/2 day)*
2. Preliminary Base Map *(1 day)*
3. Site Visit *(1/2 day)*
4. Preliminary Layout (1/2 day)
5. Potential Cost based on Schematic Design *(1/4 day)*
6. Present to committee *(1/4 day)*

Potential Pre-design Estimate (based on 800 LF 5' walk):

Walk excavation:	$1,500
Earthwork/Grading:	$2,000
Existing driveway removal:	$1,500
New walkway base:	$5,000
New 5' concrete walk:	$13,500
Pedestrian bridge over drainage swale:	$35,000
Traffic control:	$6,500
Seeding/landscaping:	$2,000
TOTAL:	**$67,000***

*does not include contingency, design fees, surveying, permitting, taxes, and contractor's overhead and profit

Bob

Robert M. Gilchrest, Project Manager
Allied Engineering Associates, LLC
95 Main Street, 3rd Floor
P.O. Box 726

Chapter Fifteen

SPECIAL DESIGN ELEMENTS

Table of Contents

Table of Contents
(Continued)

Table of Contents
(Continued)

Section **Page**

Chapter Fifteen

SPECIAL DESIGN ELEMENTS

15-1.0 ACCESSIBILITY FOR DISABLED INDIVIDUALS

Many highway elements can affect the accessibility and mobility of disabled individuals. These include sidewalks, parking lots, buildings at transportation facilities, overpasses and underpasses. The Department's accessibility criteria comply with the 1990 *Americans with Disabilities Act* (ADA) and the *General Statutes of Connecticut* (CGS). The following Sections present accessibility criteria that are based on information presented in the *ADA Accessibility Guidelines* for Buildings and Facilities (*ADA Guidelines*). Designers are required to meet the criteria presented in the following Sections. Where other agencies or local codes require standards that exceed the *ADA Guidelines*, the stricter criteria may be required. This will be determined on a case-by-case basis.

15-1.01 Buildings

ADA Reference: *Section 4.1*

For interior accessibility criteria in all buildings, airport terminals, rest areas, weigh stations and transit stations (e.g., stations for intercity bus, intercity rail, high-speed rail and other fixed guideway systems), the accessibility criteria set forth in the *ADA Guidelines* shall apply. The designer should review the *ADA Guidelines* to determine the appropriate accessibility requirements for building interiors, including rest rooms, drinking fountains, elevators, telephones, etc.

15-1.02 Bus Stops

ADA Reference: *Section 10.2*

The following accessibility criteria apply to the construction of bus stops:

2. Bus Stop Pads. New bus stop pads constructed to be used in conjunction with a lift or ramp shall meet the following criteria:

    a. A firm stable surface must be provided.

    b. It must have a minimum clear length of 96 in (measured from the curb or roadway edge) and minimum clear width of 60 in (measured parallel to the roadway) depending on the legal or site constraints.

c. It must be connected to streets, sidewalks or pedestrian paths by at least one accessible route.

d. The slope of pad parallel to the roadway must be the same as the roadway to the maximum extent practical.

e. For drainage purposes, a maximum cross slope of 2% perpendicular to the roadway is allowable.

3. Bus Shelters. Where new or replaced bus shelters are provided, they must be installed or positioned to permit a wheelchair user to enter from the public way and reach a location within the shelter having a minimum clear floor area of 30 in by 48 in. An accessible route shall be provided from the shelter to the boarding area.

4. Signing. All new bus route identification signs should be sized based on the maximum dimensions permitted by local, State or Federal regulations or ordinances. The signs shall have an eggshell, matte or other non-glare finish. The characters or symbols shall contrast with their background (i.e., light characters on a dark background or dark characters on a light background).

15-1.03 Parking

ADA Reference: Section 4.1.2

Connecticut General Statutes: CGS 14-253a Parking privileges for blind or handicapped persons. Identification card. License plates. Parking spaces. Penalty.

15-1.03.01 Off-Street Parking

ADA Reference: Section 4.1.2 and 4.6

The following criteria apply to off-street disabled parking spaces:

1. Minimum Number. Figure 15-1A provides the criteria for the minimum number of accessible spaces. A typical disabled parking stall layout is shown in Figure 15-1B.

2. Location. Parking spaces for disabled individuals and accessible passenger loading zones that serve a particular building shall be the spaces or zones closest to the nearest accessible entrance on an accessible route. In separate parking structures or lots that do not serve a particular building, parking spaces for disabled individuals shall be located on the shortest possible circulation route to an accessible pedestrian entrance of the parking facility. In buildings with multiple access entrances with adjacent parking, accessible parking spaces shall be dispersed and located closest to the accessible entrances.

Total Number of Parking Spaces	Minimum Number of Accessible Spaces
1 to 25	1
26 to 50	2
51 to 75	3
76 to 100	4
101 to 150	5
151 to 200	6
201 to 300	7
301 to 400	8
401 to 500	9
501 to 1000	2% of total
1001 and over	20 plus one for each 100 over 1000

Notes:

a. *If one or more passenger loading zones are provided, then at least one passenger-loading zone shall comply with Item #5 in Section 15-1.03.01.*

b. *Use the universal parking space design for all parking lots; see Figure 15-1B. Consequently, all disabled parking spaces are considered van accessible and signing for vans is not required.*

c. *The total number of accessible parking spaces may be distributed among closely spaced parking lots, if greater accessibility is achieved.*

MINIMUM NUMBER OF ACCESSIBLE SPACES FOR DISABLED USERS

Figure 15-1A

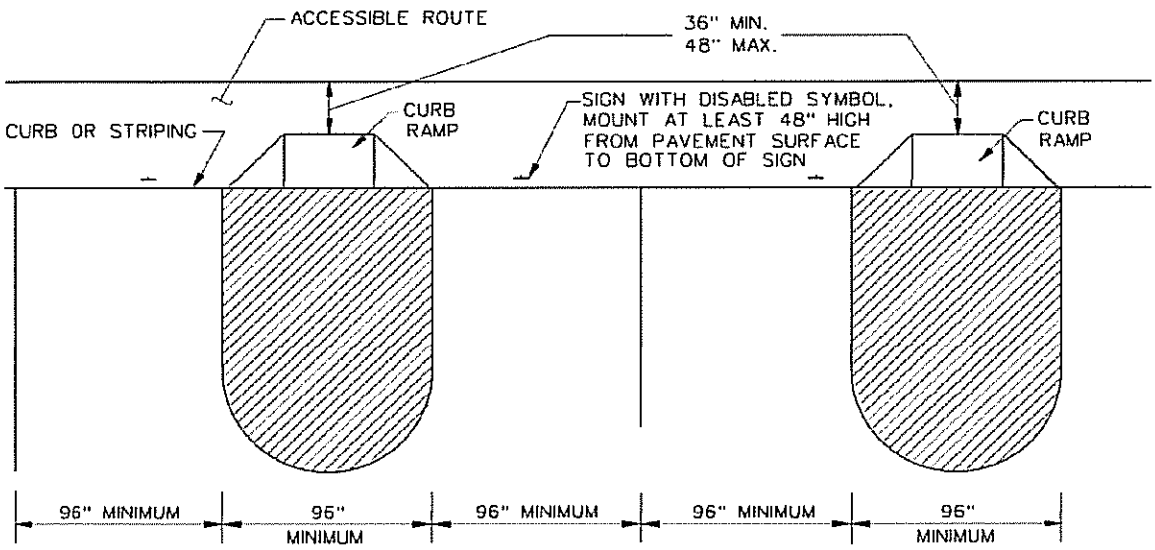

Notes: Two accessible parking spaces may share a common access aisle.

DISABLED PARKING STALL DIMENSIONS
(Off-Street Parking — Universal Parking Space Design)

Figure 15-1B

3. Signing. Parking spaces for the disabled shall be designated by above-grade signs with white lettering against a blue background and shall bear the international symbol of access (see *MUTCD*), and the words "Disabled Parking State Permit Required" and "Violators Will Be Fined". A vehicle parked in the space shall not obscure the sign.

4. Dimensions. The parking spaces designated for the disabled shall be at a minimum 192 in wide which includes a 60-in minimum access aisle, or the space should be parallel to a sidewalk on a public highway. Parking access aisles shall be part of an accessible route to the building or facility entrance. Parked vehicular overhangs shall not reduce the clear width of an accessible circulation route. Parking spaces and access aisles shall be level with surface slopes not exceeding 2% in all directions. The Division of Traffic Engineering will determine the striping plan for the disabled parking spaces.

5. Passenger Loading Zones. Passenger loading zones shall provide an access aisle at least 60 in wide and 240 in long adjacent and parallel to the vehicular pull-up space. If there are curbs between the access aisle and the vehicular pull-up space, then a curb ramp complying with Section 15-1.08 shall be provided. Vehicular standing spaces and access aisles shall be essentially level. Surface slopes shall not exceed 2% in all directions.

The criteria above shall meet any requirements of *CGS 14-253a* for parking spaces.

15-1.03.02 On-Street Parking

Where new on-street paid or time-limited parking is provided and designated in districts zoned for business uses, the designer should consider the following accessibility criteria for the on-street parking:

1. Minimum Number. Figure 15-1A provides the criteria for the minimum number of on-street accessibility spaces.

2. Location. On-street accessibility parking spaces will be dispersed throughout the project area. To the maximum extent feasible, accessible on-street parking should be located in level areas.

3. Dimensions. At a minimum, a 60-in wide perpendicular access aisle must be provided at the head or foot of the parking space. This is illustrated in Figure 15-1C. The travel lane shall not encroach into the access aisle.

4. Signing. Aboveground signs with white lettering against a blue background shall designate parking spaces for the disabled, and the signs shall bear the international symbol of access (see MUTCD) and the words "Disabled Parking State Permit Required" and "Violators Will Be Fined." These signs will be located so as to be visible from a driver's seat.

5. Curb Ramps. If there are curbs next to an on-street accessible parking space, then a curb ramp complying with Section 15-1.08 shall be provided. Access parking spaces adjacent to intersections may be served by the sidewalk curb ramp at the intersection, provided that the path of travel from the access aisle to the curb ramp is within the pedestrian crossing area.

6. Parking Meters. Where provided, parking meter controls shall be a maximum of 48 in above the sidewalk or pedestrian circulation path. Controls and operating mechanisms shall be operable with one hand and shall not require tight grasping, pinching or twisting of the wrist. The force required to activate controls shall be no greater than 5 lbs. A firm, stable and slip-resistant area (30 in by 48 in), with the least possible slope, shall be provided at the controls and shall be connected to the sidewalk by a continuous passage that is a minimum of 36 in wide.

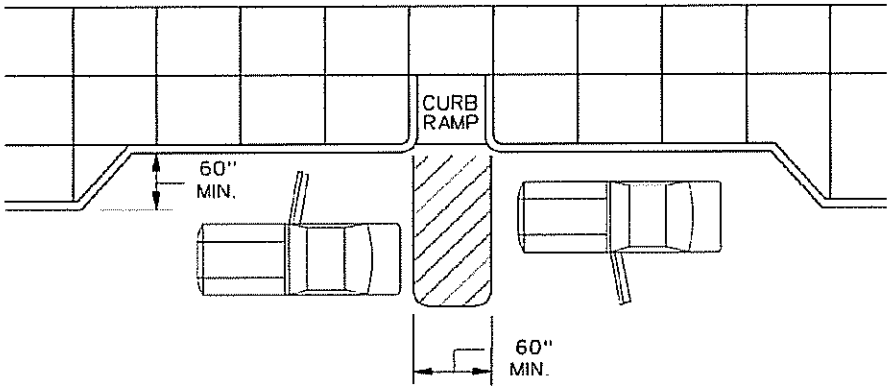

(a) TWO ACCESSIBLE PARALLEL PARKING SPACES IN SERIES, SEPARATED BY AN ACCESSIBLE AISLE, WITH BOTH DRIVER-SIDE AND PASSENGER-SIDE ACCESS DEMONSTRATED.

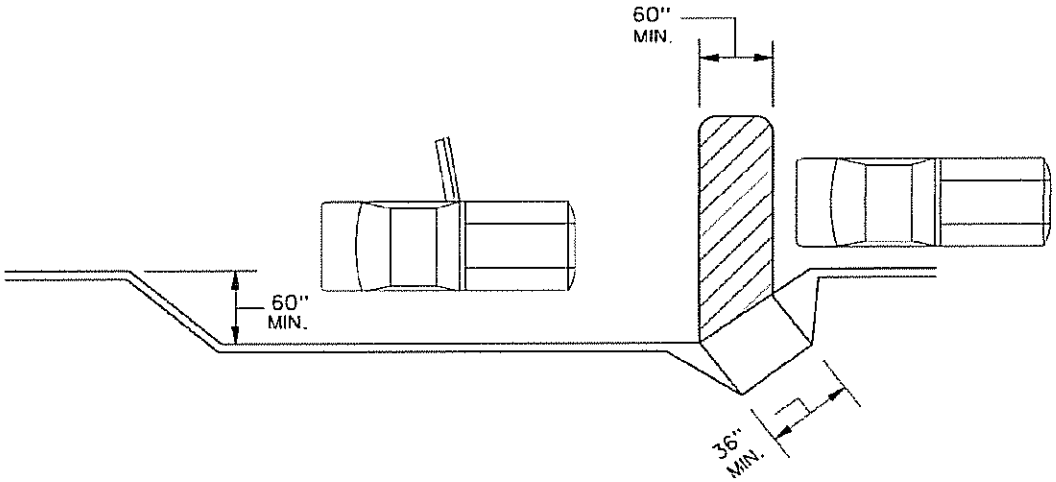

(b) SINGLE ACCESSIBLE PARALLEL PARKING SPACE WITH DRIVER-SIDE ACCESS DEMONSTRATED: PASSENGER SIDE ACCESS CAN BE PROVIDED BY PARKING IN LINE WITH STANDARD ON-STREET SPACES.

DISABLED PARKING
(On-Street Parking)

Figure 15-1C

15-1.04 Accessible Route

ADA Reference: Section 4.3

An accessible route is a continuous, unobstructed path connecting all accessible elements and spaces in a building, facility or site. A "site" is defined as a parcel of land bounded by a property line or a designated portion of a public right-of-way. A "facility" is defined as all or any portion of buildings, structures, site improvements, complexes, equipment, roads, walks, passageways, parking lots, or other real or personal property on a site. Interior accessible routes may include corridors, floors, ramps, elevators, lifts and clear floor space at fixtures. Exterior accessible routes may include parking access aisles, curb ramps, crosswalks at vehicular ways, walks, ramps and lifts.

Accessible routes must be provided as follows:

1. At least one accessible route within the boundary of the site shall be provided from public transportation stops, accessible parking, accessible passenger-loading zones, and public streets or sidewalks to the accessible building entrance they serve. The accessible route shall, to the maximum extent feasible, coincide with the route for the general public.

2. At least one accessible route shall connect accessible buildings, facilities, elements and spaces that are on the same site.

3. At least one accessible route shall connect accessible buildings or facility entrances with all accessible spaces and elements and with all accessible dwelling units within the building or facility.

For highway projects, the application of the accessible route criteria applies to definitive sites that are related to highway purposes. These include rest areas, recreational areas, park-and-ride lots, etc. Section 15-1.05 provides the accessibility requirements for sidewalks. Most sidewalks along public right-of-way are considered non-accessible.

15-1.05 Sidewalks

Section 10-2.01 presents the Department's warrants and design criteria for sidewalks. In addition, all sidewalks must comply with the *ADA Guidelines* presented in the following Sections.

15-1.05.01 Criteria for Accessible Routes

ADA Reference: Various.

For sidewalks on accessible routes, the following accessibility criteria shall be met:

1. Width. The minimum clear width shall be 36 in, except at doors that may have a minimum width of 32 in.

2. Passing Space. If the sidewalk has less than 60 in clear width, then passing spaces at least 60 in by 60 in shall be located at reasonable intervals not to exceed 200 ft. A T-intersection between two walks is an acceptable passing space. Paved driveways also provide acceptable passing space in residential areas.

3. Surface. All sidewalk surfaces shall be stable, firm and slip resistant. The longitudinal gradient should be flush and free of abrupt changes. However, changes in level up to 0.25 in may be vertical and without edge treatment. Changes in level between 0.25 in and 0.5 in shall be beveled with a slope no greater than 50%. Changes greater than 0.5 in shall be accommodated with a ramp; see Section 15-1.07.

   Gratings should not be placed within the walking surface. If, however, gratings are located in walking surfaces, they shall have spaces no greater than 0.5 in wide in one direction. If gratings have elongated openings, then they shall be placed so that the long dimension is perpendicular to the dominant direction of travel.

4. Slope. The sidewalk cross slope shall not exceed 2%. If the longitudinal gradient exceeds 5%, the sidewalk must meet the accessibility criteria for ramps (see Section 15-1.07).

5. Protruding Objects. Objects projecting from walls (e.g., signs, telephones, canopies) with their leading edges between 27 in and 80 in above the finished sidewalk shall not protrude more than 4 in into any portion of the sidewalk. Freestanding objects mounted on posts or pylons may overhang their mountings up to a maximum of 12 in when located between 27 in and 80 in above the sidewalk or ground surface. Protruding objects less than 27 in or greater than 80 in may protrude any amount provided that the effective width of the sidewalk is maintained. Where the vertical clearance is less than 80 in, a barrier shall be provided to warn the blind or visually impaired person.

6. Separation. Sidewalks will be separated from roadways by curbs, snow shelf or other barriers, which will be continuous except where interrupted by driveways, alleys or connections to accessible elements.

7. Bus Stops. Where bus passenger-loading areas or bus shelters are provided on or adjacent to sidewalks, they must comply with the criteria in Section 15-1.02.

8. Curb Ramps. All curb ramps on an accessible route must comply with the criteria in Section 15-1.08.

15-1.05.02 Criteria for Public Rights-of-Way

All sidewalks along the public rights-of-way should be made accessible to people with disabilities. In general, a sidewalk supported by a new or an altered structure shall be made fully accessible using the accessible route criteria for sidewalks and ramps. A sidewalk at street or highway grade shall be designed to meet accessible route criteria for sidewalks to the maximum extent feasible.

The scope of a project shall determine the level of accessibility improvements that must be provided on a project. For all projects that include new construction, reconstruction, and/or 'alterations' to existing facilities, the proposed improvements within the project limits (transverse limits as well as longitudinal limits) shall be made accessible to the maximum extent feasible.

In addition, certain pavement preservation and resurfacing projects are considered an 'alteration' to the existing facility and therefore these 'alteration' projects must provide accessible curb ramps at all legal crosswalks (marked or unmarked) which abut the project paving limits. An existing non-accessible sidewalk along a roadway being altered does not need to be specifically addressed as the sidewalk is beyond the limits of the project.

For the purposes of this section, a pavement preservation or resurfacing project shall be considered an 'alteration' unless the proposed work is limited to 'maintenance activities' and the proposed work does not include milling of the entire roadway prior to the application of a pavement overlay/treatment. 'Maintenance activities' include, but is not limited to: pavement treatments an inch or less in thickness (ultra-thin bonded hma, chip seals, microsurfacing, etc.), joint repair, pavement patching (filling potholes), signing, striping, minor signal upgrades, and repairs to drainage systems.

In all cases, any proposed improvement must ensure that accessibility is not degraded in any way

.

Existing public right-of-way need not be expanded solely for the purpose of accessibility; however, if additional right-of-way is being acquired for other project needs, the designer should explore if additional right-of-way may be acquired to provide full accessibility. Designers should consult the Department's ADA Transition Plan for Public Rights-of-Way to determine if related work has been identified as needed to achieve accessibility in existing facilities at the same location. Accessibility issues which are identified, but are not being addressed within a project, should be forwarded to the Design Development Unit for inclusion in the Department's Transition Plan.

For sidewalks along the public right-of-way, there may be locations where a sidewalk is being constructed or altered and it is technically infeasible to make it fully accessible. Steep physical terrain or site constraints (existing buildings and bridges, historic properties, etc) are instances where providing full accessibility may be technically not feasible. A sidewalk at street or highway grade shall not exceed the general grade established for the adjacent street or highway. When it is determined that it is technically not feasible to provide full accessibility, the designer shall document in the project file the issue(s) and what solutions were explored.

Accessibility issues should be identified and addressed at the earliest stage possible to reduce or prevent conflicts with other design considerations. Use of special plan details to remove accessibility barriers may be necessary; refer to the Appendix of this chapter for additional resources concerning accessible design.

15-1.06 Stairs

ADA Reference: Section 4.9

Stairs shall not be part of an exterior accessible route because individuals in wheelchairs cannot safely negotiate them. Where stairs are used, they should be designed to be accessible by other disabled individuals. Therefore, the design of stairs must comply with Section 4.9 of the *ADA Guidelines* and the *Connecticut Standard Drawings*. This includes the provision of handrails.

15-1.07 Ramps

ADA Reference: Sections 4.1.6, 4.8 and 4.26

Any part of an accessible route with a slope greater than 5% shall be considered a ramp and shall conform to the *ADA Guidelines*. This includes the provision of handrails. The following criteria must be met for ramps on accessible routes:

1. Slope and Rise. The least possible slope should be used for any ramp. Figure 15-1D provides the maximum allowable ramp slopes for new construction. Curb ramps and ramps to be constructed on existing sites or in existing buildings or facilities may have slopes and rises as shown in Figure 15-1E, if space limitations prohibit the use of a 1:12 slope or less.

2. Width. The minimum clear width of a ramp shall be 36 in.

Slope	Maximum Rise	Maximum Run
Steeper than 1:16 but no steeper than 1:12	30 in	30 ft
Steeper than 1:20 but no steeper than 1:16	30 in	40 ft

Note: A slope steeper than 1:12 is not allowed.

ALLOWABLE RAMP DIMENSIONS
(New Construction)

Figure 15-1D

Slope	Maximum Rise	Maximum Run
Steeper than 1:10 but no steeper than 1:8	3 in	2 ft
Steeper than 1:12 but no steeper than 1:10	6 in	5 ft

Note: A slope steeper than 1:8 is not allowed.

ALLOWABLE RAMP DIMENSIONS
(Existing Sites, Buildings and Facilities)

Figure 15-1E

3. Landings. Ramps shall have level landings at the bottom and top of each run. Landings shall have the following features:

   a. The landing shall be at least as wide as the ramp run leading to it.

   b. The landing length shall be a minimum of 60 in clear.

   c. If ramps change direction at landings, the minimum landing size shall be 60 in by 60 in.

4. Handrails. If a ramp run has a rise greater than 6 in or a horizontal projection greater than 72 in, then it shall have handrails on both sides. Handrails are not required on curb ramps. Handrails shall have the following features:

   a. Handrails shall be provided along both sides of ramp segments. The inside handrail on switchback or dogleg ramps shall be continuous.

   b. If handrails are not continuous, they shall extend at least 12 in beyond the top and bottom of the ramp segment and shall be parallel with the floor or ground surface.

   c. The clear space between the handrail and the wall shall be 1.5 in.

   d. Gripping surfaces shall be continuous.

   e. Top of handrail gripping surfaces shall be mounted between 34 in and 38 in above ramp surfaces.

   f. Ends of handrails shall be either rounded or returned smoothly to floor, wall or post.

   g. Handrails shall not rotate within their fittings.

5. Cross Slope and Surfaces. The cross slope of ramp surfaces shall be no greater than 2%. Ramp surfaces shall comply with the criteria for "Surface" for sidewalks (Section 15-1.05).

6. Edge Protection. Ramps and landings with drop-offs shall have curbs, walls, railings or projecting surfaces that prevent people from slipping off the ramp. Curbs shall be a minimum of 2 in high.

7. Outdoor Conditions. Outdoor ramps and their approaches shall be designed so that water will not accumulate on walking surfaces.

15-1.08 Curb Ramps

ADA Reference: Section 4.7

Connecticut General Statutes: CGS 7-118a

15-1.08.01 General

"Curb cuts" and "curb ramps" are terms that describe the treatment at intersections for gradually lowering the elevation of sidewalks with curbs to the elevation of the street surface. The term "curb ramps" will be used in this *Manual*.

All curbs and sidewalks shall be designed with curb ramps at all pedestrian crosswalks to provide adequate and reasonable access for the safe and convenient movement of physically disabled persons. This applies to new construction, reconstruction, 3R and spot improvement projects. For the purpose of this Section, a pedestrian crosswalk is defined as that portion of a highway or street ordinarily included within the prolongation or connections of lateral lines of sidewalks at intersections. It also includes any portion of a highway or street distinctly indicated as a crossing for pedestrians by lines or other markings on the surface, except such prolonged or connecting lines from an alley across a street.

15-1.08.02 Location

When determining the need for a curb ramp, the designer should consider the following:

1. If at least one curb will be disturbed by construction at an existing intersection, then curb ramps shall be constructed at all crosswalks which extend from a paved sidewalk in that intersection.

2. For all projects, curb ramps will be constructed at all crosswalks that provide pedestrian access in that intersection and will be provided on all corners. At T-intersections, the designer must ensure that curb ramps are located on the side opposite the minor intersecting road if warranted for pedestrian access.

3. Opposing ramps must always be provided on adjacent legs of an intersection even if outside project limits.

4. Curb ramps shall be positioned so as not to cause a safety hazard for blind pedestrians.

5. Curb ramps shall be located or protected to prevent their obstruction by parked vehicles.

6. Curb ramps at marked crossings shall be wholly contained within the markings, excluding any flared sides.

7. A diagonal curb ramp shall be wholly contained within the painted markings, including any flared sides. There shall be at least 24 in of full-height curb within the crosswalk. In addition, there shall be at least 48 in between the gutter line and the corner of the two intersecting crosswalks. See Figure 15-1F for an illustration of these criteria.

8. The function of the curb ramp must not be compromised by other highway features (e.g., guiderail, catch basins, utility poles, signs).

9. Curb ramps are required at all curbed intersections with sidewalks or along all accessible routes.

10. The location of the curb ramp must be consistent with the operation of pedestrian-actuated traffic signals, if present. In addition, a pedestrian push-button must be located so wheelchair-bound individuals can reach it.

11. The designer will provide the Division of Traffic Engineering with a set of plans at the preliminary design stage and before the preliminary design review. The Division of Traffic Engineering, in its review, will determine the need and location of mid-block curb ramps. These recommendations will be incorporated into the design before the

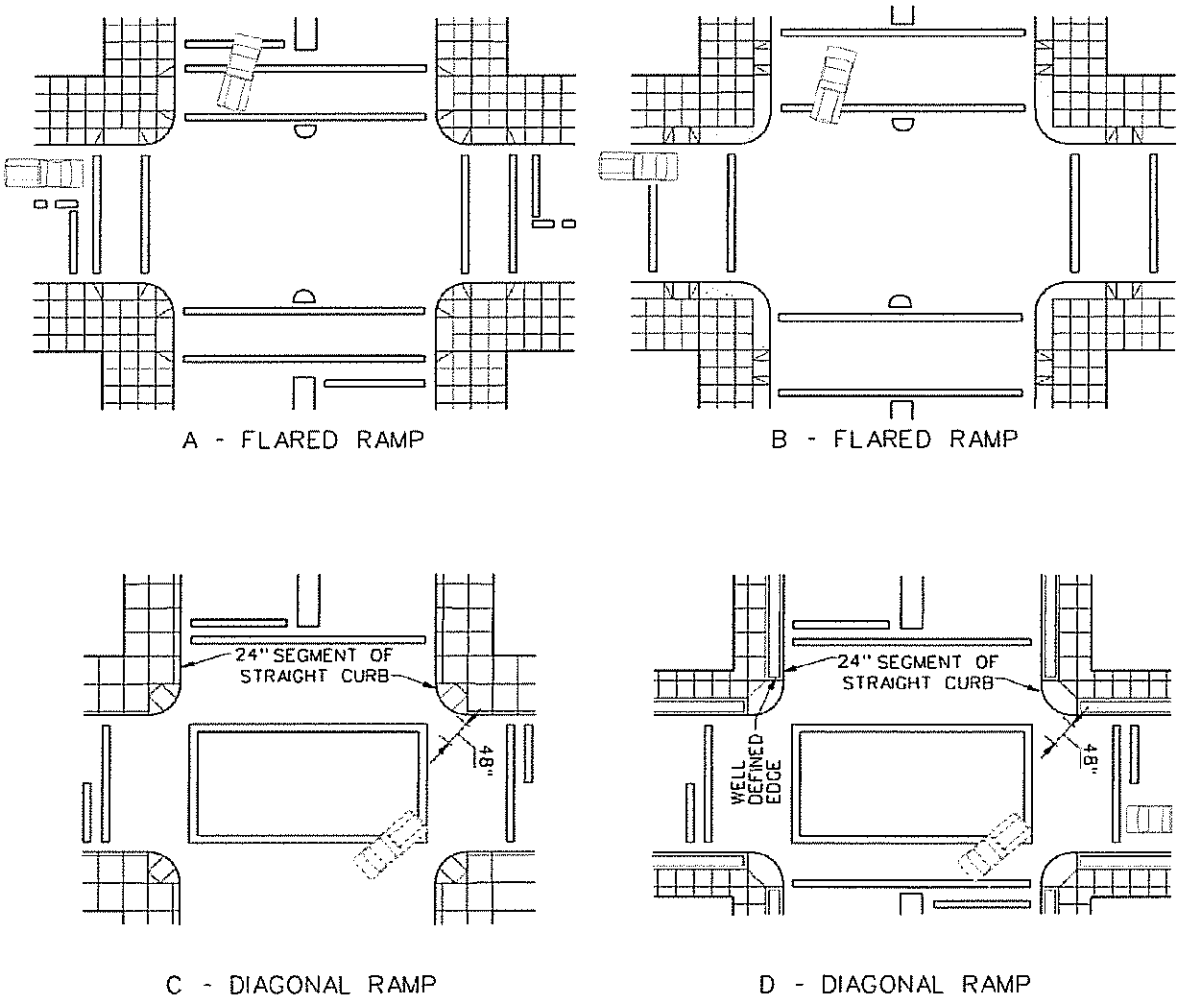

Notes:

1. *See Figure 15-1G for details of flared curb ramps.*
2. *See Figure 15-1H for details of diagonal curb ramps.*
3. *As an alternative to the diagonal curb ramp, the designer can provide two flared curb ramps at each corner.*

CURB RAMPS AT MARKED CROSSINGS

Figure 15-1F

preliminary design review. In addition, the Division of Traffic Engineering will be notified of any geometric changes that will impact the location of any curb ramp included in the preliminary design review.

15-1.08.03 Crossing Controls

If a pedestrian crosswalk and curb ramp are present at an intersection with a traffic signal that has pedestrian detectors (push buttons), the following will apply:

1. Location. Controls shall be located as close as practical to the curb ramp and, to the maximum extent feasible, shall permit operation from a level area immediately adjacent to the controls.

2. Surface. A firm, stable and slip-resistant area, a minimum of 36 in by 48 in, shall be provided to allow a forward or parallel approach to the controls.

15-1.08.04 Types

Figure 15-1F illustrates the two basic types of curb ramps — flared and diagonal. Details for the construction of flared curb ramps are provided in Figure 15-1G and for diagonal curb ramps in Figure 15-1H.

The following provides several suggestions for selecting the appropriate curb ramp:

1. Crosswalk Markings and Stop Bars. The placement of curb ramps affects the placement of crosswalk markings and stop bars. Conversely, the location of existing crosswalk markings and stop bars affect the placement of curb ramps. Some of the crosswalk-marking constraints are shown in Figure 15-1F and in the *Connecticut Standard Drawings*. The *MUTCD* contains additional constraints on crosswalk markings and stop bar placement.

2. Obstructions. It is desirable to move any obstructions from curb ramps whenever practical. When this is not practical, the direction of traffic relative to the placement of the curb ramp must be considered. It is important that drivers can see the disabled person using the curb ramp.

3. Diagonal Curb Ramps. The usage of a diagonal curb ramp should be avoided whenever practical due to its effect on the crosswalk width. It is preferable to use the straight curb ramp or several straight ramps rather than to use a diagonal curb ramp.

4. Islands. Any raised islands in a pedestrian crosswalk shall be cut through level with the street or have curb ramps at both sides and a level area at least 48 in long in the part of the island intersected by the crossing; see Figure 15-1I.

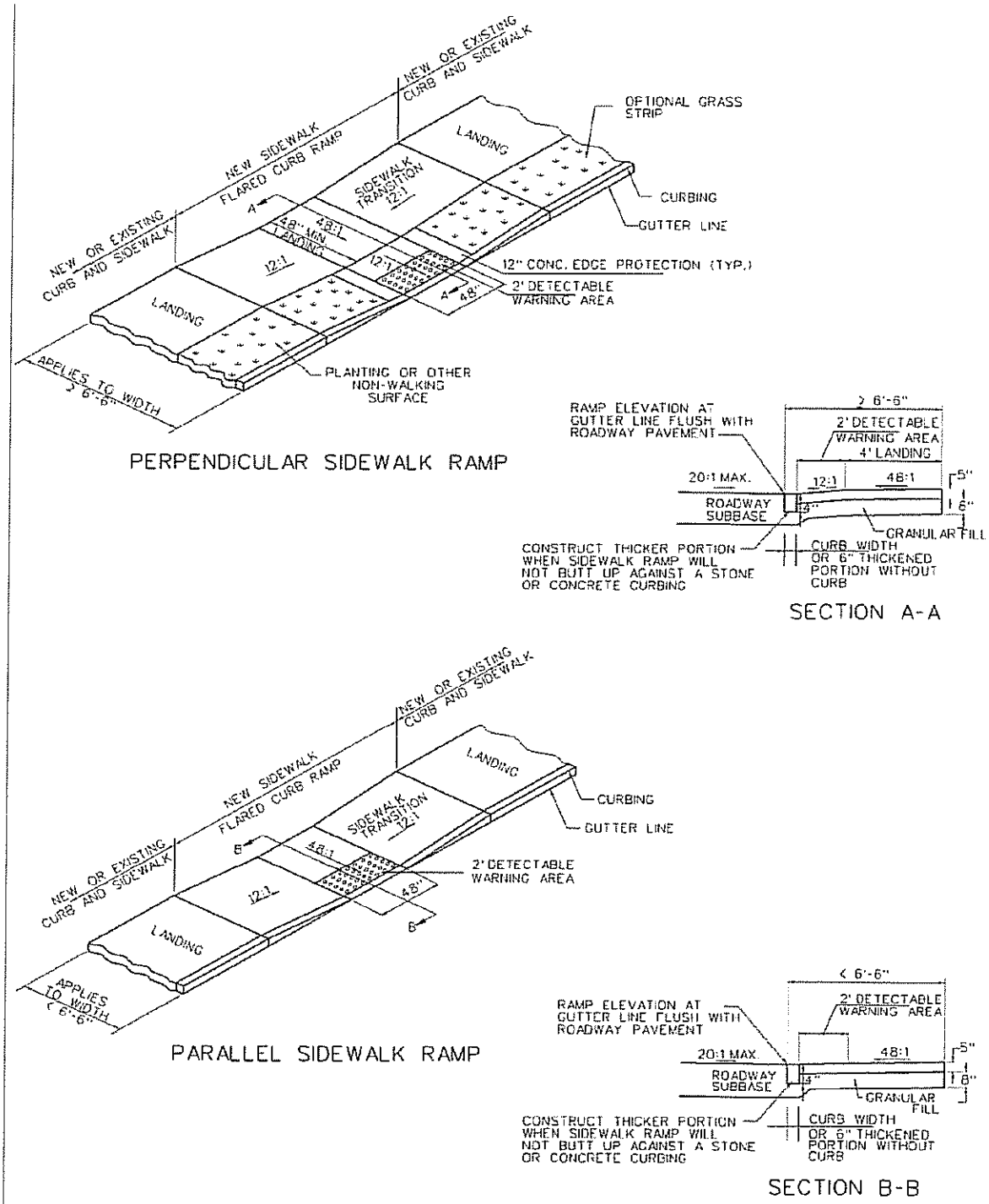

FLARED CURB RAMPS

Figure 15-1G

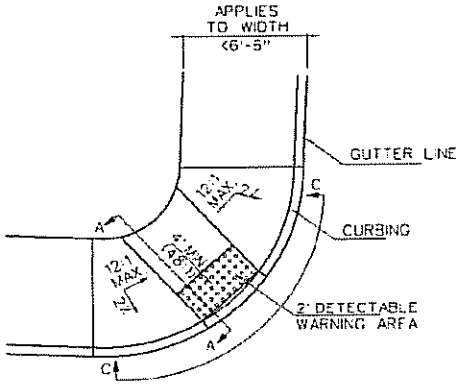

DIAGONAL/PARALLEL SIDEWALK RAMP

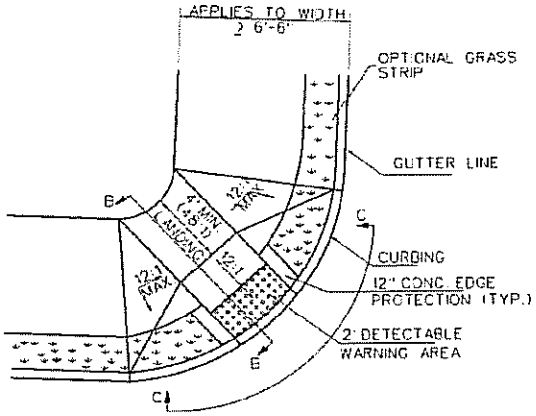

DIAGONAL SIDEWALK RAMP

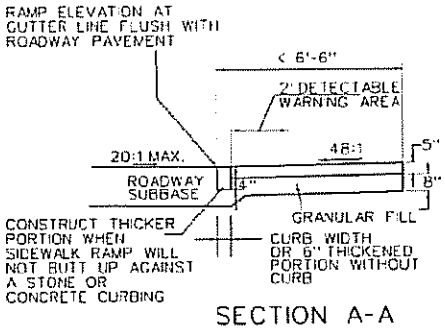

SECTION A-A

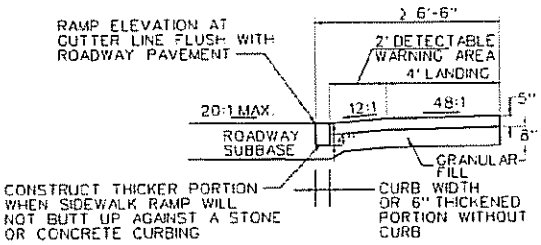

SECTION B-B

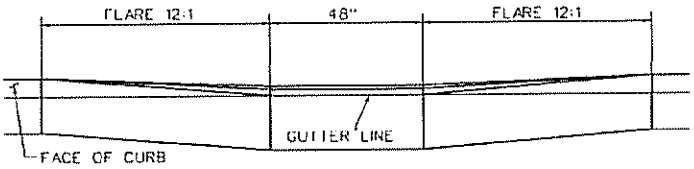

SECTION C-C

DIAGONAL CURB RAMPS

Figure 15-1H

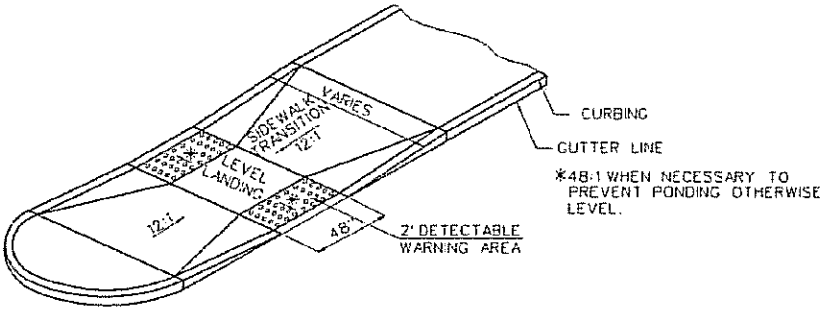

RAISED ISLAND SIDEWALK RAMP

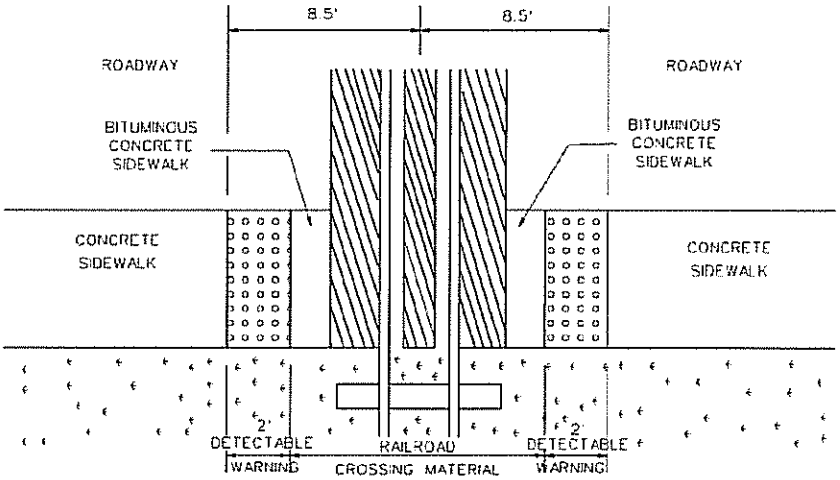

DETECTABLE WARNINGS AT RAILROAD CROSSING

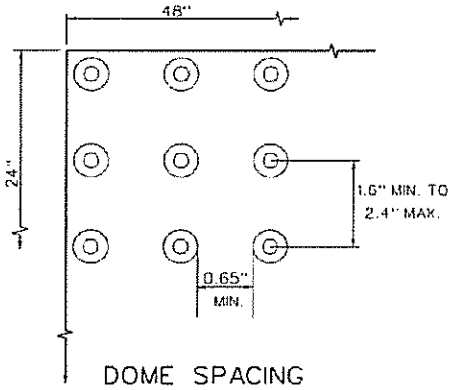

DOME SPACING

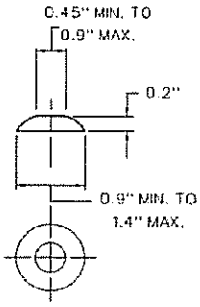

DOME SECTION

DOME DETAILS FOR DETECTABLE WARNINGS

Figure 15-1I

5. Material. Regardless of the type of pavement of the adjacent sidewalk, all curb ramps shall be constructed of Portland cement concrete. Also, all curb ramps shall be constructed in accordance with the details of the *Connecticut Standard Drawings* for concrete sidewalk, except for the ramp, which will have a textured and non-slip surface.

6. Specifications. Curb ramps shall be constructed, measured and paid for as concrete sidewalks, as referred to in the Department's *Standard Specifications for Roads, Bridges and Incidental Construction*, latest issue.

15-1.09 Pedestrian Overpasses and Underpasses

ADA Reference: Various

When deciding where to locate a pedestrian crossing, the highway and structure designers must coordinate their efforts to properly address the accessibility considerations. The following are applicable:

1. All current and future accessible routes must be identified. If existing routes are inaccessible, the designer must evaluate the likelihood the routes will be made accessible in the future. This could be done as part of the project under design.

2. The evaluation in Item #1 may lead to the decision to relocate the pedestrian overpass or underpass to another site where accessibility can be more easily provided.

3. The proposed design must meet the *ADA Guidelines* criteria for stairs, ramps, curb ramps and accessible routes.

4. The designer should reference FHWA-IP-84-6 *Guidelines for Making Pedestrian Crossing Structures Accessible* for additional design information.

15-1.10 Detectable Warning Surfaces

ADA Reference: 4.29

Detectable warnings are required on all curb ramps and at sidewalk railroad crossings. Details for the construction of detectable warnings are provided in Figures 15-1G, 15-1H and 15-1I.

The following provides guidance for the installation of detectable warnings:

1. Any island that is to be used for pedestrian refuge shall have detectable warnings on the curb ramps located at both sides of the island.

2. Where a railroad crosses pedestrian facilities at grade, detectable warnings shall be installed in the sidewalk on both sides of the railroad crossing.